Overview

The FAQs about Pos-E-Kon® Interconnects: The Most Frequently Asked Questions and Answers — for Pos-E-Kon Customers



International Standards, Worldwide Use

Why?

Rectangular Circuit Interconnections

- Best use of space for multiple contacts in heavy-duty housings
- Easy to assemble with many different insert options
- Best fit for easy access in panels, machinery and enclosures
- Sealed connector with quick disconnect handles
- Wide variety of circuit possibilities from standard items
- Solid or stranded wire in fixed or portable use

Who?

- Machine tool OEMs
- Material handling equipment OEMs
- Robotics systems OEMs and installations
- Packaging machinery OEMs and facilities
- Control panels and PLC systems
- Molding, assembly or line machinery OEMs and facilities
- Construction, mining and welding apparatus
- Carnival applications

What?

- Servo controls
- Sensing and feedback loops
- Conveyor and process controls
- Low power, DC or logic systems
- Combination power, system and other circuits
- Modular controls including fiber-optic connections

Where?

Worldwide agency approvals and applications

- DIN VDE 0627/86, 0110/02.79, and 0110-1/04.97
- IEC 60.664-1, DIN/IEC 512
- UL Recognized (E215386) and CSA Certified
- Protection classes IP44 through IP65 per IEC 529
- Component use in CE marked equipment OK per IEC Council Directive July 1999, 73/23/EEC
- Available from Thomas & Betts – POS-E-KON authorized distributors
- T&B sales representatives and agents worldwide

Thomas&Betts

United States
Tel: 901.252.8000
800.816.7809
Fax: 901.252.1354

Technical Services
Tel: 888.862.3289

www.tnb.com

Overview

The Basic System: Build an Application

Step 1 – Maximum voltage and amperage requirements (300V or 600V classes, 10–80 amps).
Step 2 – Number of contacts or circuits needed.
Step 3 – Choose wire terminations style; screw terminal or crimp contacts. Select series from charts.
Step 4 – Base (or coupler) and hood construction/mating selection per series (single or double levers).

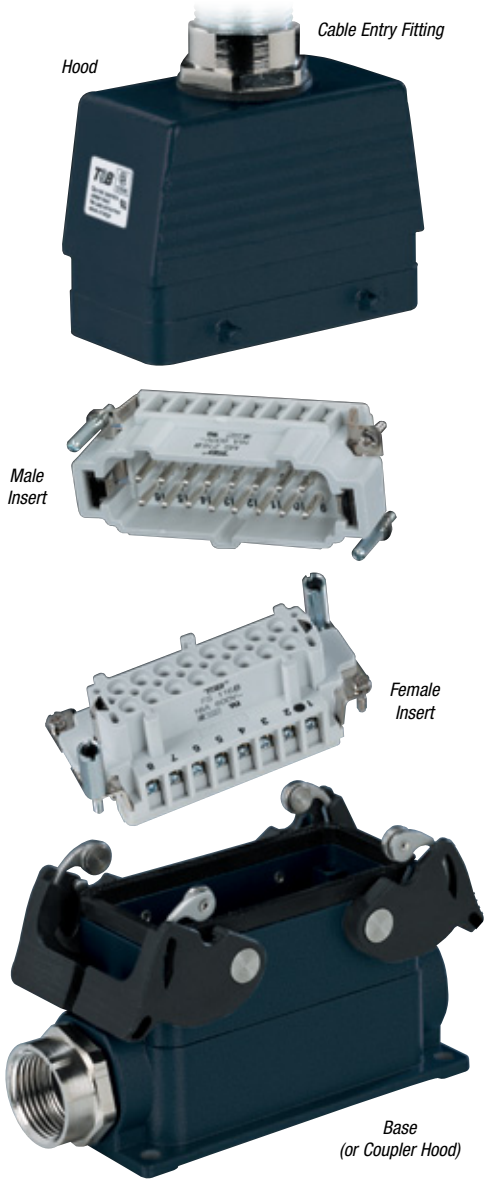

Cable Entry with Fitting

As Easy As 1. 2. 3. 4.

1. Hood:

- Separable housing for inserts
- Top or side conduit/wire entry
- Standard locking posts, dual or single
- Locks to Panel Base, Box Base or inline Coupler Hood

2. Base Housing (or Coupler Hood):

- Surface wall-mount box base (shown)
- Panel Base for through-panel access
- Coupler Hood mating for portable use
- Single or dual “lever” locking

3. Male Insert

- Male contact carrier body
- Screw terminal contacts (pins with wire protection saddles) or crimp terminated pins

4. Female Insert

- Female contact carrier
- Screw terminal contacts (sleeves with wire protection saddles) or crimp terminated sleeves

DIN Standard Configurations

- Most inserts and housings are interface compatible with other DIN standard lines. Verify physical application before selecting cross reference.
- Pos-E-Kon® construction includes standard NPT conduit adapters for hoods and bases, with many options available. DIN standard Hoods and Bases may have “Euro Style” PG fittings (or none) included unless specially ordered.

Overview

Pos-E-Kon Insert Selector Chart

S – Screw Terminals

C – Crimp Contacts

F – Fiber Optic (POF)

A – Terminal Block Wiring Adapter

Select the # of contacts — all inserts have separate ground contacts

AMPS	VOLTS	SERIES	3	4	6	7	8	10	12	15	16	20	24	25	26	32	40	42	48	50-216
10	50	D					C, F													
10	600	A	S	S																
16	600	A						S, C			S, C					S, C				
16	600	B			S, C, A			S, C, A			S, C, A		S, C, A			S, C			S, C	
35	600	C			S				S											
10	600	D				C, F				C, F				C, F			C, F, A			C, F, A (64)
10	600	DD											C, F					C, F		C, F
80/16	600	K		S			S	4 or 8 Power (80A alone or with 8 or 16 Control (16A) Combination Inserts												
16-T	600	T			S			S			S		S		High Temp (200° C)					
316-V	600	V	S, C		S, C			S, C			S, C	S, C			S, C	S, C	Includes 2 Pilot Contacts			

Screw Terminal/Insert Types (Integral Contacts)

Screw termination is used for ease of assembly plus ease of maintenance. No tooling beyond a screwdriver and wire strippers is required.

10–16A A, B, V, T	35A C	10–80A K
		

Crimp Terminal/Insert Types (Crimp Contacts)

Crimp terminals offer solid, thermally cool vibration-resistant terminations for OEM equipment and critical applications. Better for smaller AWG sizes also. Crimp tools are noted in each section.

10A D & DD	16A A & B
	

16A A & B	10A D & DD	POF D
		
		

All crimp types represented require contacts ordered separately.

Each section contains hand crimp tool selection notes.

Thomas&Betts

United States
Tel: 901.252.8000
800.816.7809
Fax: 901.252.1354

Technical Services
Tel: 888.862.3289

www.tnb.com

Overview

Screw Terminal Inserts

- Integral screw terminal contacts provide for easy terminal wiring and fast assembly
- Standard wire protection saddles prevent cutting of strands during assembly

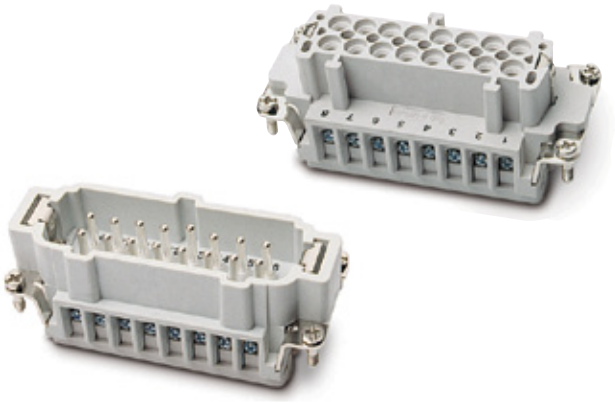

Crimp Terminal Inserts

- Provides reliable connections for long-term configurations
- Contact sizes accommodate wiring from 12–20 AWG

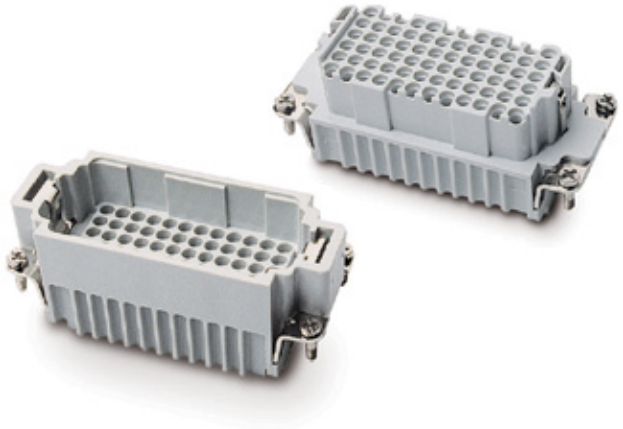

- Made of durable glass fiber-filled thermoplastic
- Contact numbers clearly marked for easy identification
- Easily installed (male or female) in either hoods or bases using captive mounting screws

WAR, Right Ground Strap
WAL, Left Ground Strap

Terminal Block Wiring Adapters

- Allows for measuring of circuit while in operation
- Provide easy connections in panel mounting configurations
- Labels available for easy identification of circuits
- Can be mounted on DIN rails by using snap-on mounting feet
- Used in switch cabinets, panel enclosures or mounted in panel base housings — see B and D series

Insert Strip Blank – WAM1B
Insert Strip Nos. 1–64 – WAM1N64
Insert Strip Letters A–Z – WAM1AZ

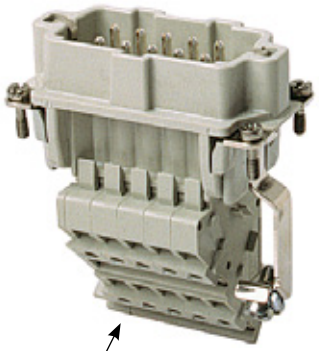

WAM1 Marker Tab Clips
Snap-in formed label holder tabs allow terminal identification for B Series.



DIN Mounting Foot FE807TB

Overview

Hood and Base Housings

- **Rugged cast aluminum hoods and bases:** Maximum performance in many operating conditions
- **Various hood heights available:** Easier assembly and wiring with low, high and standard profiles
- **Corrosion-resistant finishes:** Optional special materials extend life in corrosive conditions
- Locking possibilities include **single locking** system and **double locking** system
- **Complete selection:** Flexible product designs (see Hood/Base Cross Reference below)
- **Dust covers and more:** See Adapters (**page G-113**) and Covers (**page G-112**) or Bases with Covers available in most series (Accessories, **page G-154**)
- **Custom configurations:** Multiple conduit entry/sizes and other configurations available to spec

Cross Reference — Inserts

AMPS	VOLTS	SERIES	A4	A10	A16	AA32	B6	B10	B16	B24	B32	B48
Series Application			*Standard Hood/Base Housing*									
10A	50	D	D8									
10A	600	A	A3, A4									
16A	600	A		A10	A16	A32						
16A	600	B					B6	B10	B16	B24	B32	B48
35A	600	C							C6		C12	
10A	600	D	D7	D15	D25	D50			D40	D64	D80	D128
10A	600	DD					DD24	DD42	DD72	DD108	DD144	DD216
80/16A	600	K								K4/8		K8/16
Series Application			*Special Series Hood/Base Housing*									
16A-T*	600	T					T6	T10	T16	T24		
16A-V**	600	V						V3	V6	V10		V32

** Special high-temperature series in copper-free aluminum with special green epoxy powder coat, Viton® seals.†*

*** Special isolation design allows additional control circuit capability.*

† Viton® is a trademark of DuPont Performance Elastomers.



Box Base



Top Cable Entry



Box Base Housing with single lever and spring cover. Metal spring covers available for B series, where noted.

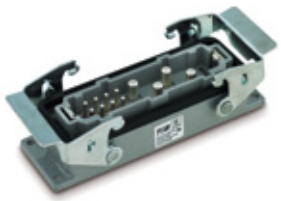

Panel Base



Side Cable Entry

Thomas&Betts

United States
Tel: 901.252.8000
800.816.7809
Fax: 901.252.1354

Technical Services
Tel: 888.862.3289

www.tnb.com

Overview

1. Select size (# of contacts) from each series' section left-hand page chart (selected inserts), then look at corresponding right-hand page columns.
2. Vertical columns note single or double locking systems available (double locking usually preferable).
3. Select base housings for mounting and/or function: conduit/cable entry, thru-panel access, inline coupler or reversed locking as shown. (Note profile height options.)
4. Select side or top entry hoods as shown. (Note profile height options.)
5. Review conduit and cable entry options (standard NPT adapter sizes for each series).

***Note**: M Series (layout) groups interior options, followed by base selection options.*

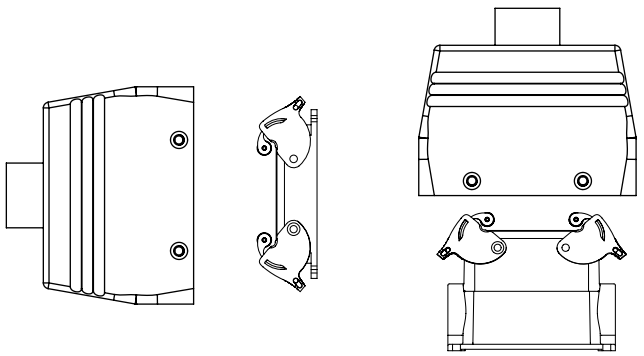

Each Right-Hand Page Shows:

- Standard Bases
- Base to Hood
- Standard Hoods
- Hood to Coupler
- Portable Service
- Coupler Hoods

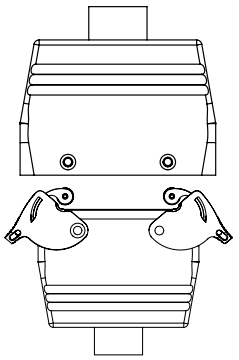

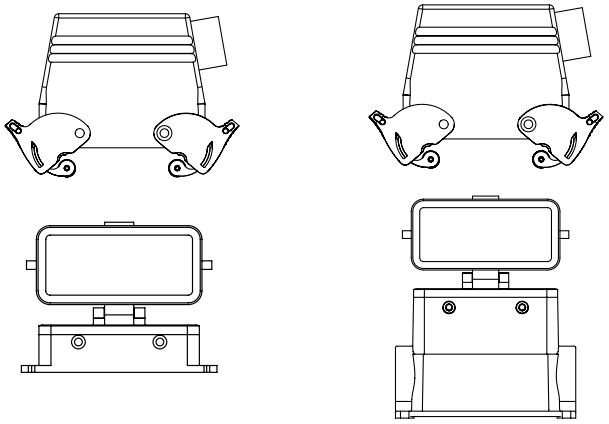

- Reverse Locking
- Lever Hoods
- Hood to Base
- Post Bases

Overview

Sub-Miniature (DB) Adapter Plates

- Connect test and diagnostic equipment to control circuits
- Panel base, box housing base or any hood installation (ribbon cable — entry hoods available)
- Industry standard sizes
- Dust covers for protection recommended
- 9, 15, 25, 37 and 50 series



B24 Insert Mounting Adapter Plates

- Allows housing standardization for multiple applications
- B24 footprint fit to single B6, B10, B16 inserts
- Rugged thermoplastic
- Fits standard B24 Hoods and Bases

B24 Insert Mounting Adapter Plates

- Allows custom connections for drill-and-install work
- Blank plate for expansion
- All standard Hood/Base sizes supported



Dust Covers & Hinged Covers

(thermoplastic) (thermoplastic or metal)

- Separate covers or fixed-mount hinged types
- Metal fixed-mount hinged covers for B series bases available in select sizes
- Separate or fixed covers protect contacts when not in use or while unmated





Thomas&Betts

United States
Tel: 901.252.8000
800.816.7809
Fax: 901.252.1354

Technical Services
Tel: 888.862.3289

www.tnb.com

Overview

Wire and Cable Entry Options

Portable Service Cord

- Sheathed industrial multi-conductor cables usage
- Options cover many installation needs
- Special constructions available for retrofit or original specification
- Hoods and Bases may be specified (in bulk volumes)
- Euro standard gland seal also available



Cable Compression Seal Fitting



Euro Gland Seal

Standard NPT Conduit Adapters

- Euro PG to NPT thread adapters (PG male to NPT female)
- Standard on all Pos-E-Kon Hoods and Bases
- Available separately for MRO
- Sizes from (PG11 to ½") through (PG48 to 1½") NPT



Cord Grip Fittings

- Both NPT and PG thread styles
- Thermoplastic sealing glands in NPT, PG and ISO threads — for retrofit or original specification
- More options than shown are available (shown in gray; black also available)



Pos-E-Kon® Advantages

- Feature: Ergonomic thermoplastic levers for "B" series double-lever housings B10–B24
- Benefits: Non-slip comfortable grip for easier locking and unlocking
- Feature: Laser-etched labeling for all metal housings and hot-stamped labeling on contact carrier inserts
- Benefits: Permanent marking with all data combined in external marking vs. internal label



Overview

Easy-to-use catalog number construction pioneered by Thomas & Betts

Hoods

TH – Top Entry Hood with NPT fitting

SH – Side Entry Hood with NPT fitting





Double posts (front/back) for Double-Lever locking (single-side posts/lever also).

Wiring Entry options

- Cord or Conduit Adapter fittings
- Ribbon cable and Euro cable entry
- Housings without fittings
- Custom assemblies



Male and Female Terminal Block Wiring Adapters

MS or **FSxxxWAR/WAL**

(right/left ground) options for Panel Base installations

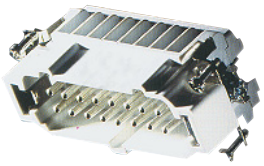

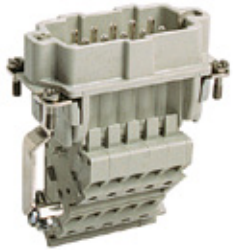



Male and Female Inserts

– same installation to any hood or base orientation

MS – **M**ale **S**crew Terminal Insert (shown)

FS – **F**emale **S**crew Terminal Insert (shown)

– OR –

MC – **M**ale **C**rimp Insert

FC – **F**emale **C**rimp Insert

>use **MP** – **M**ale and **FP** – **F**emale **P**ins



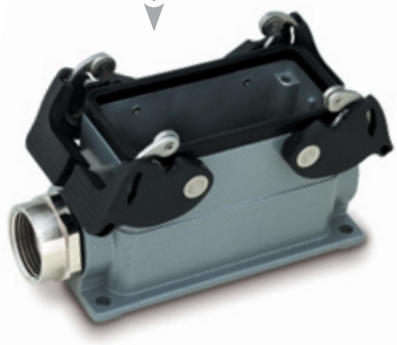



PB – **P**anel **B**ase Housing Panel face or bulkhead mounting with rear wiring access

BB – **B**ox **B**ase Housing Surface Mount with NPT conduit entry (1 or 2) fittings (standard)

CH – **C**oupler **H**ood Inline Portable Connection

Locking

- Single lever/Single posts or Double lever/Double posts locking
- "Reversed Locking" (levers on hoods) available

Thomas&Betts

United States
Tel: 901.252.8000
800.816.7809
Fax: 901.252.1354

Technical Services
Tel: 888.862.3289

www.tnb.com

Overview

Series Locator

	SERIES	FEATURES	CONTACTS + G	PAGE
	**A Series** 10A: 3, 4 16A: All others	Small, Compact Size Screw Terminal	3, 4, 10, 16, 32	**G-116**
	**B Series** 16A	Standard Size Screw Terminal	6, 10, 16, 24, 32, 48	**G-118**
	**C Series** 35A	High-Current Screw Terminal	6 or 12	**G-122**
	**D Series** 10A	High-Density Crimp Contacts or Fiber Optic Contacts	7, 8, 15, 25, 40, 50, 64, 80, 128	**G-124**
	**DD Series** 10A	Very High-Density Crimp Contacts	24, 42, 72, 108, 144, 216	**G-128**
	**K Series** 16A/80A	Combo, High-Current/Std. Current Screw Terminals	16A: 8 + 4 80A: 16 + 8	**G-132**
	**V Series** 16A	Control Circuit Contacts and B Style Screw Terminals	3, 6, 20, 26, 32	**G-134**
	**T Series** 16A	B Style @ High-Temp 200° C Screw Terminals	6, 10, 16, 24	**G-138**
	Reference & Accessories	Specs, Dimensions, Components and Fiber Optics		**G-140**