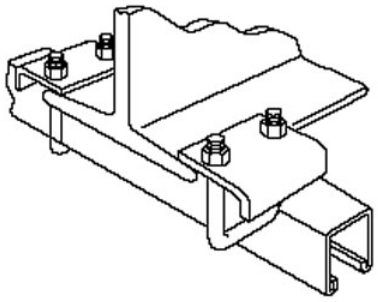

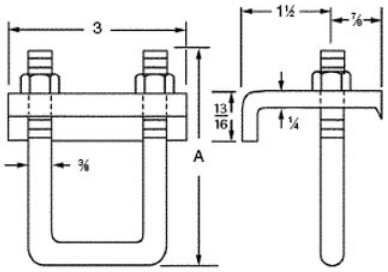

Kindorf®

T&B Catalog Number: **E 760 2**
UPC Number: 78599177810
Description: Steel Channel to Beam Clamp with Galv-Krom® finish.

Status: Active

Application	
	Hardened points bite into beam flange. Fits all I-beams where edge of beam flange does not exceed .8" thickness.
	For use with B 900, B 905, B 906 and B 907 series channels.
General	
Material	Steel
Finish	Galv-Krom®
Design Load (lbs)	2200
Dimension Information	
Dimension A (inches)	3 1/4
Specifications	
Engineering Data & Specifications- Metallic Channel	Available on Website
Packaging	
Package in Units	20
T&B Sold in UOM	Each
T&B Weight Per UOM	75.75 lbs. per 100
Application Support	
Metal Framing Systems	Available on Website
Finishes & Materials	Available on Website
Beam Clamps & Hanger Rod Supports	Available on Website
Certifications	
RoHS Compliance	No

For further technical assistance, please contact us...

Thomas & Betts - USA
8155 T&B Blvd.
Memphis, TN 38125
www.tnb.com

T&B Technical Support
MS 3B-50
8155 T&B Blvd.
Memphis, TN 38125

Hours: 7AM - 6PM CDT
Monday-Friday
Phone: (888) 862-3289
Fax: (901) 252-1321
Email:techsupport@tnb.com