Fastener Accessories and Hardware

Signal Reference Grid Wire Clamp

- Supports signal reference grid wires below computer-room floors
- One fastener supports wire sizes #8 stranded (.146") to #4 stranded (.232")
- Fits post sizes ¾" to 1" round or square
- Slots in fastener grip wire provides positive contact with post
- Clamps grid wire directly to post, enabling a low-resistance connection across bare metal contacts
- Installs easily with a screw driver or nut driver



Fig. 1

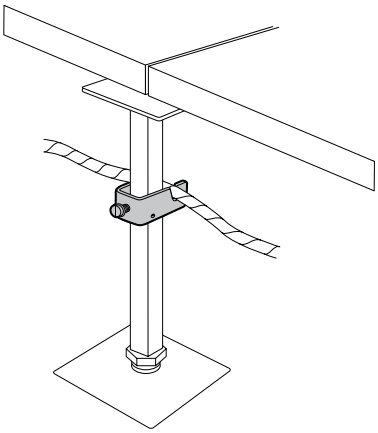

CAT. NO.	FIG. NO.	DESCRIPTION	STD. CTN.
3900	1	Signal reference grid wire clamp	100

Deck Hanger

- Easy method to hang items below decking
- Requires pre-drilled hole, ¼" diameter
- Works for material thicknesses up to ⅛"

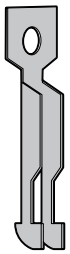

Fig. 1

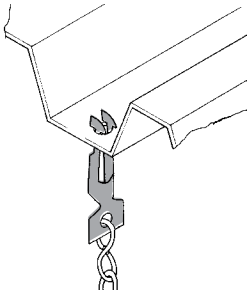

CAT. NO.	FIG. NO.	DESCRIPTION	STD. CTN.
SSF-MNH	1	Deck Hanger Clip	100

Hardware Components



Fig. 1



Fig. 2



Fig. 3

CAT. NO.	FIG. NO.	DESCRIPTION	STD. CTN.
E142-1/4X075EG	1	¼–20 x ¾" hex head bolt	50
E142-1/4X100EG	1	¼–20 x 1" hex head bolt	50
E142-1/4X150EG	1	¼–20 x 1½" hex head bolt	50
E145-1/4EG	2	¼–20 x ¼" hex nut	100
SSF-MH1/4-3/8	3	¼–20 x ⅜" bolt combo head	100

R-Series Continuous Thread Rod — Galvanized



CAT. NO.	ROD SIZE	ULTIMATE ‡ LOAD IN LBS.	DATA FOR PRESSURE PIPING: ROOT AREA THREAD	DATA FOR PRESSURE PIPING: NOMINAL PIPE SIZE	DATA FOR PRESSURE PIPING: MAX. SAFE LOAD AT 450°	STD. CTN.
R628-6 FT.	¼-20	900	.027	—	—	300
R638-6 FT.	⅜–16	1,900	.068	¾"–2"	610	150
R648-6 FT.	½–13	3,500	.126	2½"–3½"	1,130	60
R1028-10 FT.	¼–20	900	.027	—	—	500
R1038-10 FT.	⅜–16	1,900	.068	¾"–2"	610	250
R1048-10 FT.	½–13	3,500	.126	2½"–3½"	1,130	100

‡ *Load Ratings based on safely factor of three.*

Thomas&Betts

United States
Tel: 901.252.8000
800.816.7809
Fax: 901.252.1354

Technical Services
Tel: 888.862.3289

www.tnb.com