EDRN FAST SPLICE

CABLOFIL®
INNOVATORS IN CABLE MANAGEMENT

8319 State Route 4
Mascoutah IL 62258
Phone: 800–658–4641
618–566–3230
Fax: 618–566–3250
www.cablofil.com

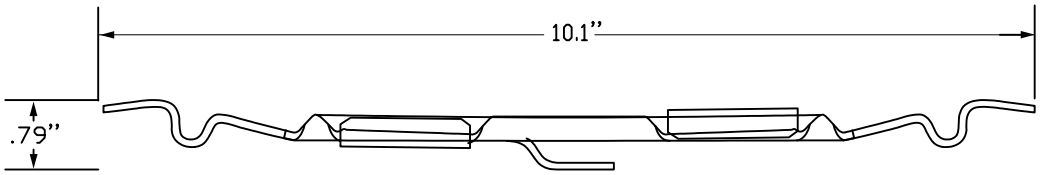

TOP

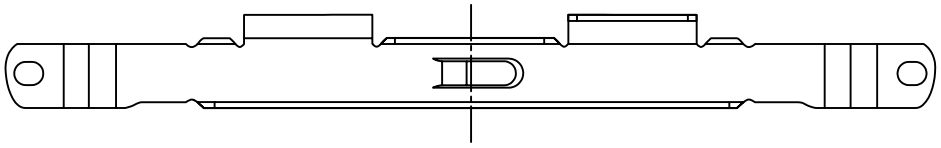

SIDE FRONT

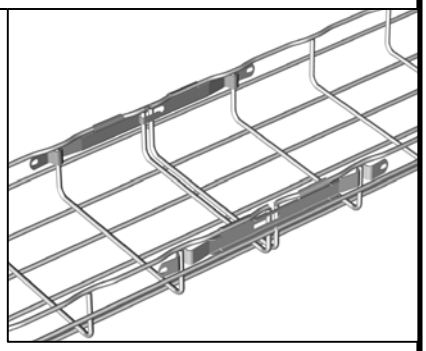

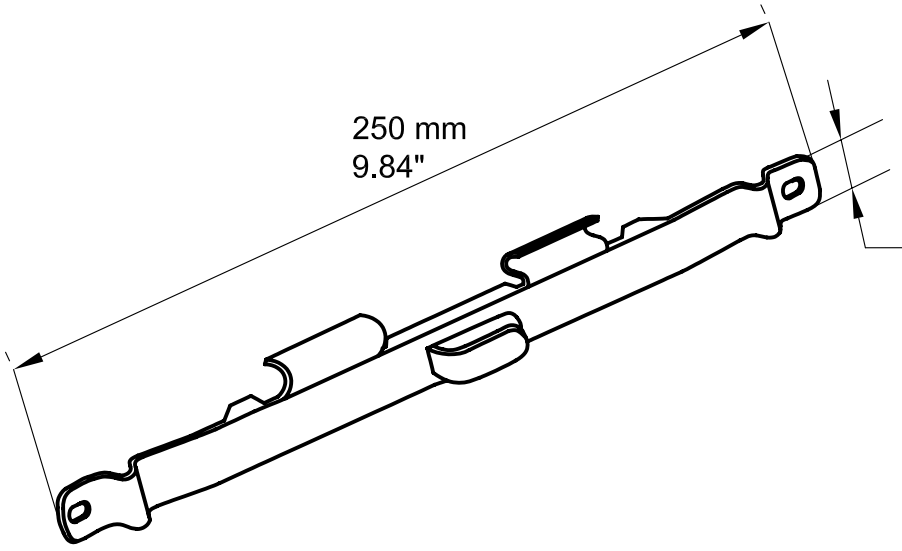

	lb
EDRN	0.154

EZ DC BL PE

Copyright©2005 Cablofil, Inc.