Version: A-4-V1.01

5kW AIO Inverter&Battery Wiring Diagram&Configuration



Catalogue

I. Single-phase Connection&Configuration.....1

Single-phasewithone5kWinverter(ServerRackBattery 1

Single-phasewithone5kWinverter(PowermegaBattery) 1

Single-phasewithtwo5kWinvertersinparallel(ServerRackBattery) 1

Single-phasewithtwo5kWinvertersinparallel(PowermegaBattery) 1

Single-phasewiththree5kWinvertersinparallel(ServerRackBattery) 1

Single-phasewiththree5kWinvertersinparallel(PowerMegaBattery).....1

II. Split-phaseconnection&configuration.....5

Split-phasewithtwo5kWinvertersinparallel(ServerRackBattery) 5

Split-phasewithtwo5kWinvertersinparallel(PowerMegaBattery) 5

Split-phasewiththree5kWinvertersinparallel(ServerRackBattery) 6

Split-phasewiththree5kWinvertersinparallel(PowerMegaBattery) 7

III. Three-phaseconnection&configuration.....7

Three-phasewiththree5kWinvertersinparallel(ServerRackBattery) 7

Three-phasewiththree5kWinvertersinparallel(PowerMegaBattery) ...8

I. Single-phaseConnection&Configuration

- Single-phase with ***one*** 5kW inverter ***(Server Rack Battery)***

  - With ATS (Optional)

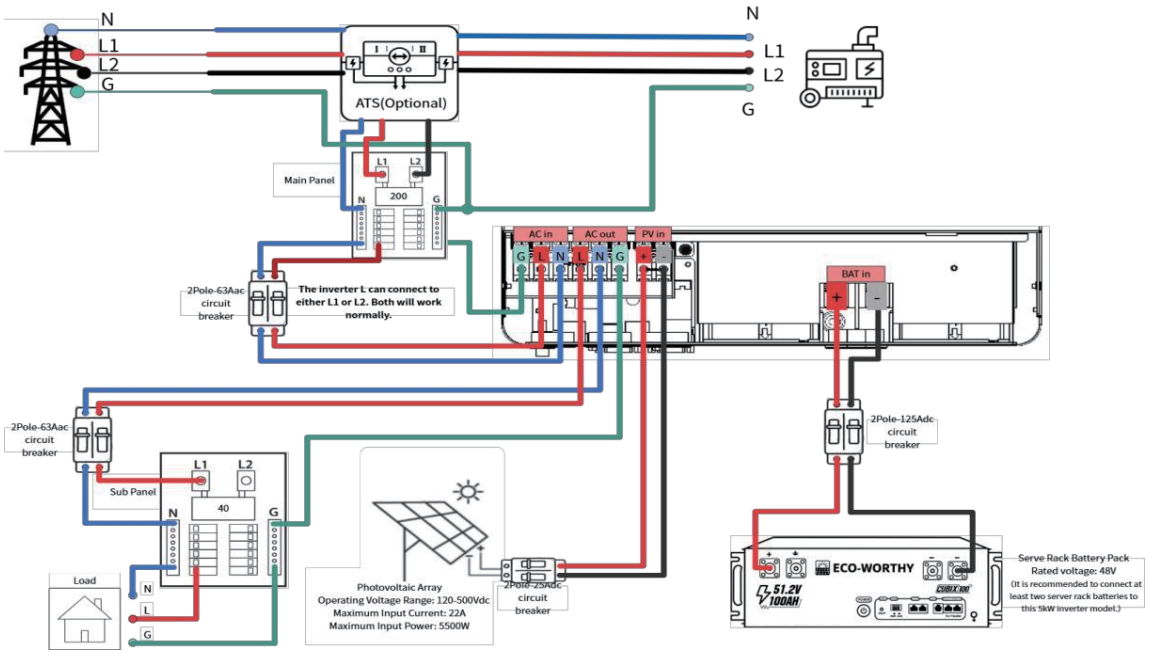

  - With MTS (Optional)

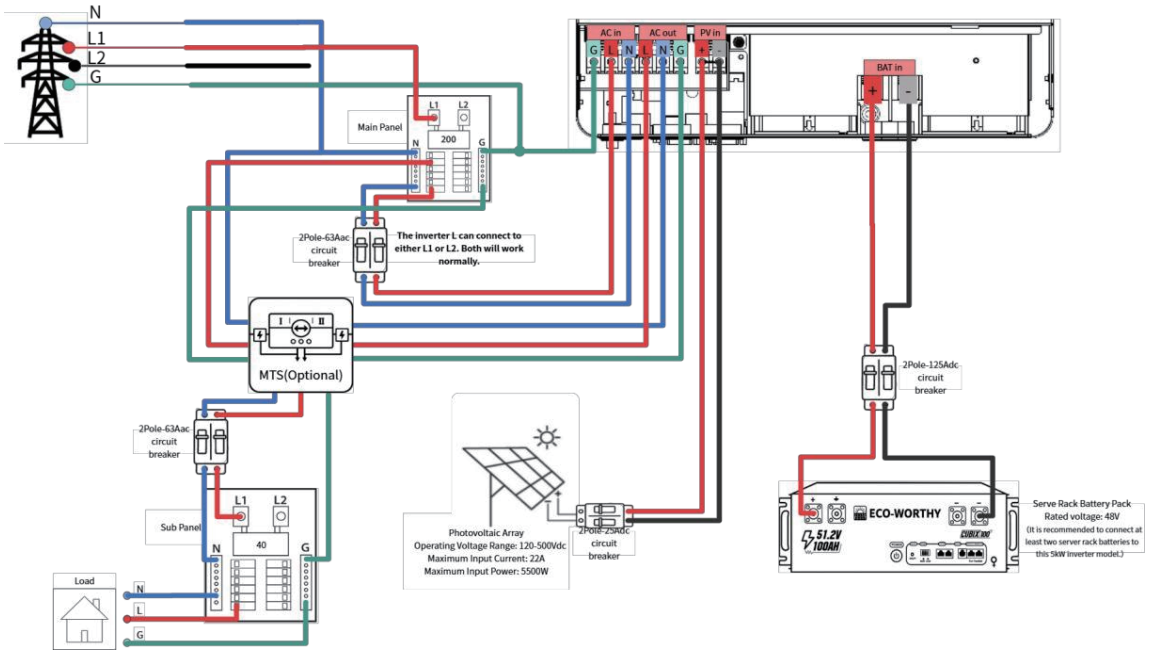

essvipsupport@eco-worthy.com.cn
https://www.eco-worthy.com/

- Single-phase with ***one*** 5kW inverter ***(Power mega Battery)***

  - With ATS (Optional)

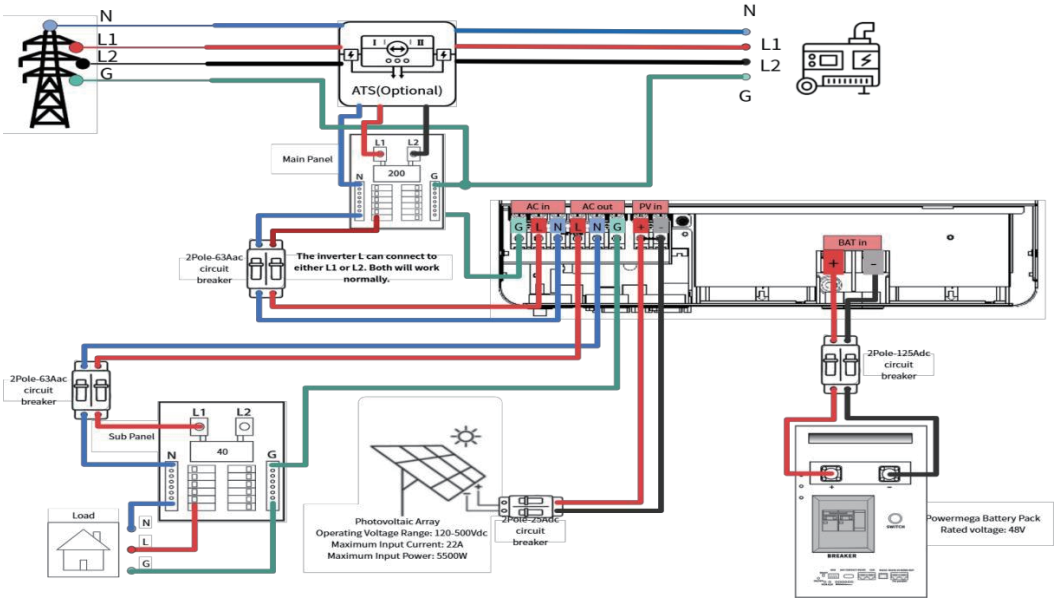

  - With MTS (Optional)

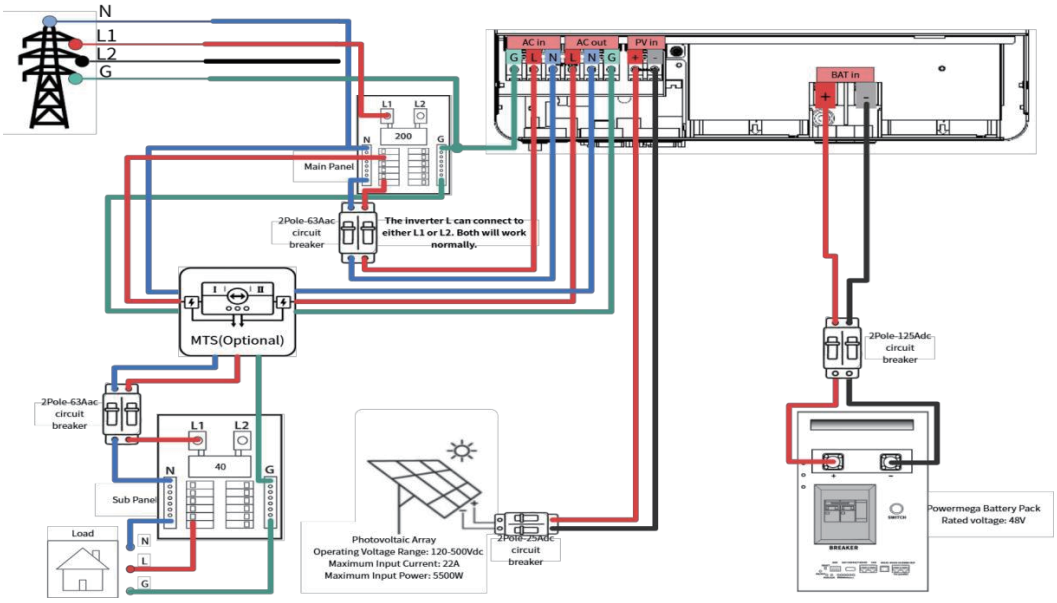

Configuration:
【08】--LF16
【30】--1
【31】--SIG
【32】--RS485
【33】--PYL

- Single-phase with ***two*** 5kW inverter in parallel ***(Server Rack Battery)***

  - With ATS (Optional)

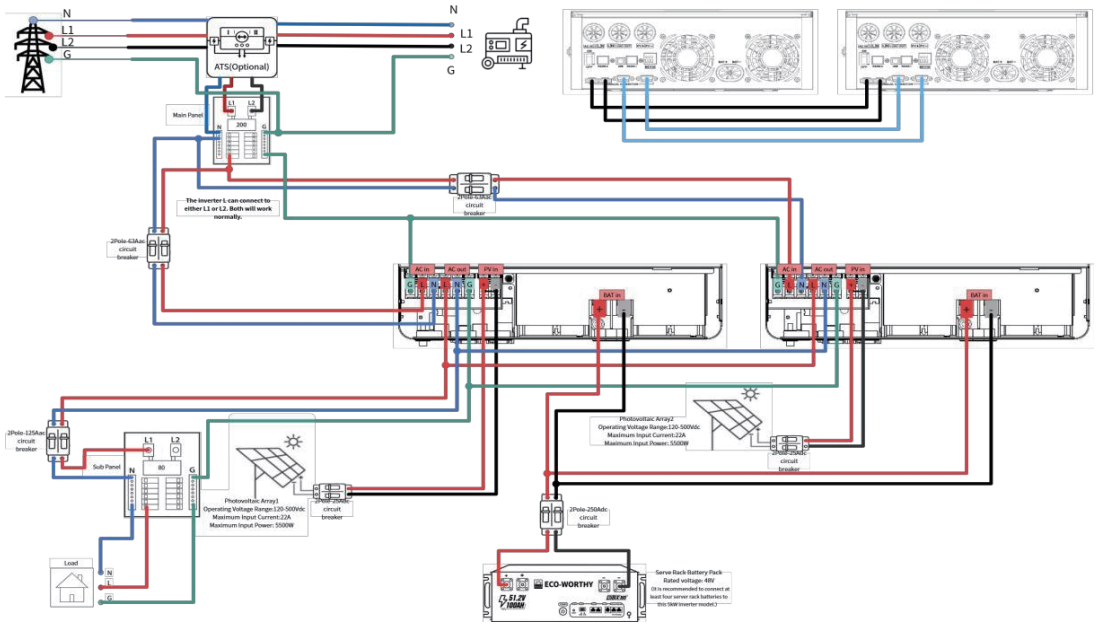

  - With MTS (Optional)

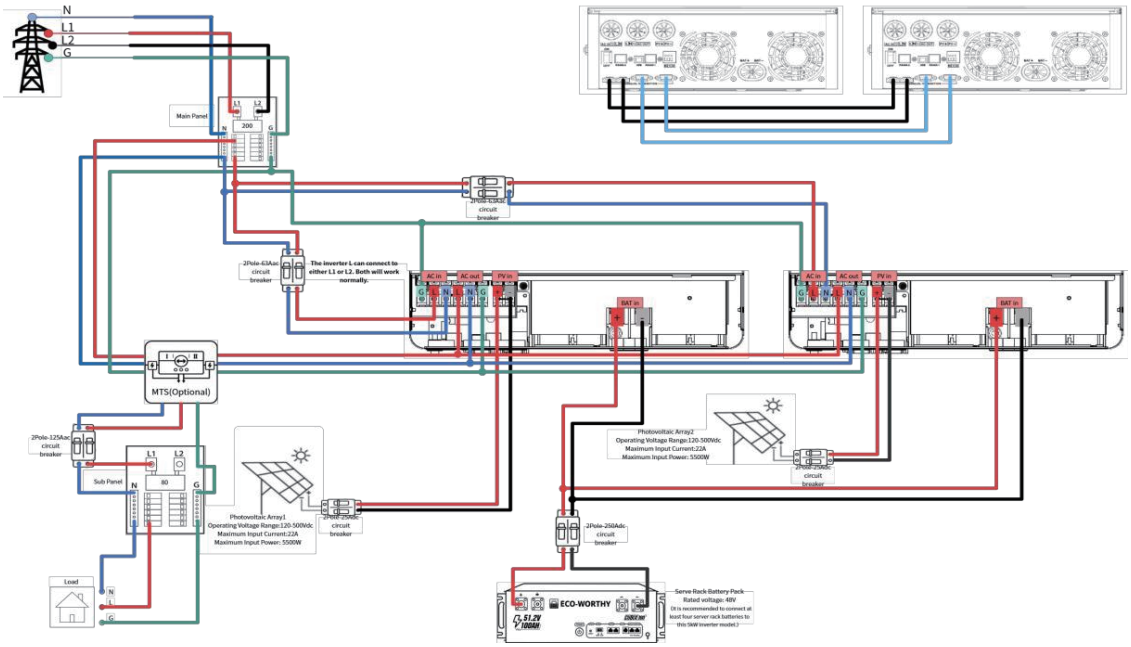

essvipsupport@eco-worthy.com.cn
https://www.eco-worthy.com/

- Single-phase with ***two*** 5kW inverter in parallel ***(Power mega Battery)***

  ■ With ATS (Optional)

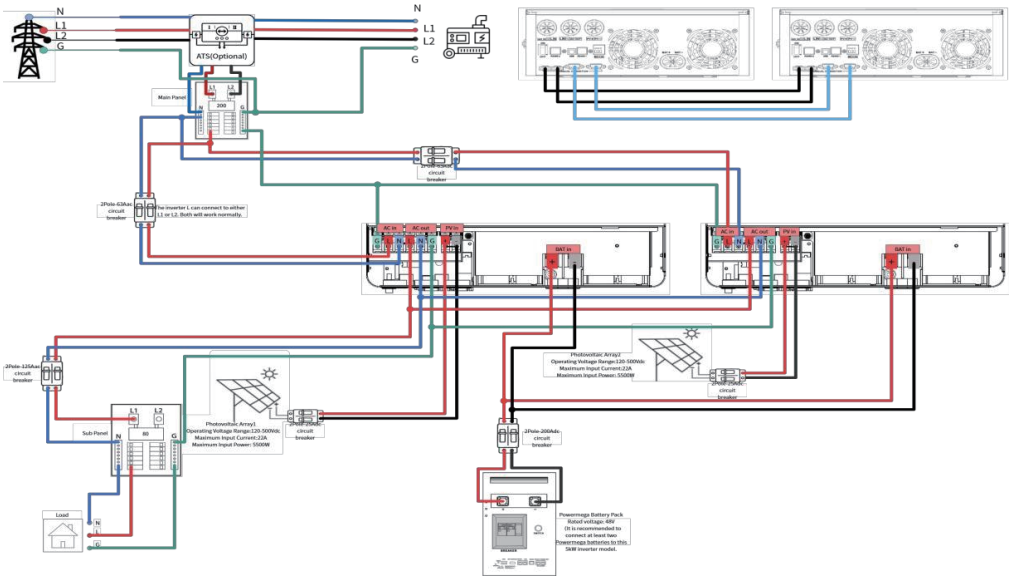

  ■ With MTS (Optional)

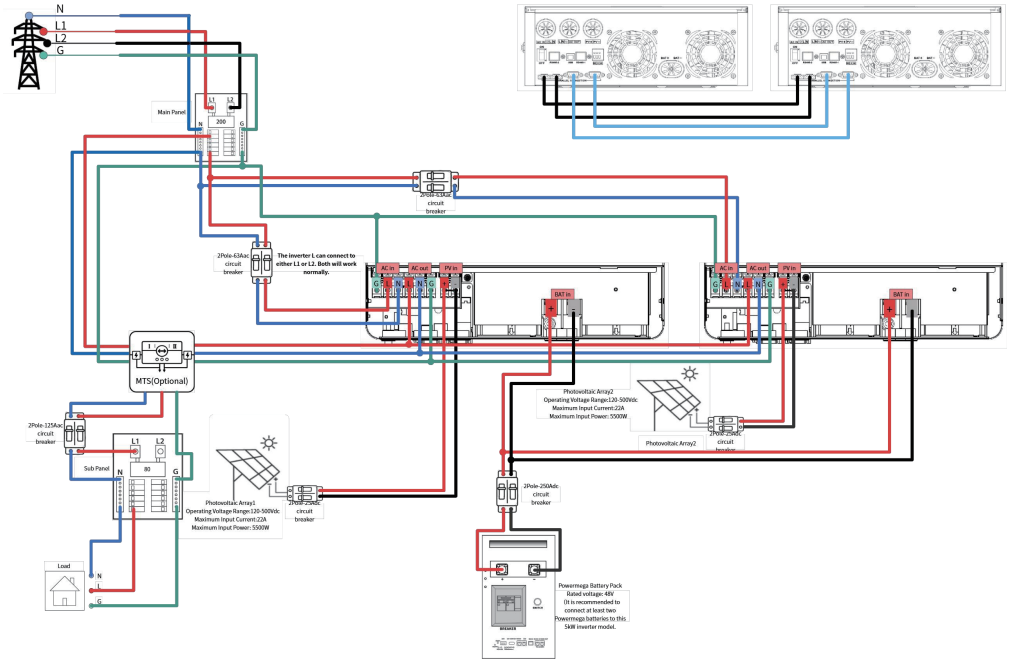

Configuration:

【08】--LF16
【30】--1/2(deviceID)
【31】--PAL
【32】--RS485
【33】--PYL

essvipsupport@eco-worthy.com.cn
https://www.eco-worthy.com/

- Single-phase with ***three*** 5kW inverter in parallel ***(Server Rack Battery)***

  - With ATS (Optional)

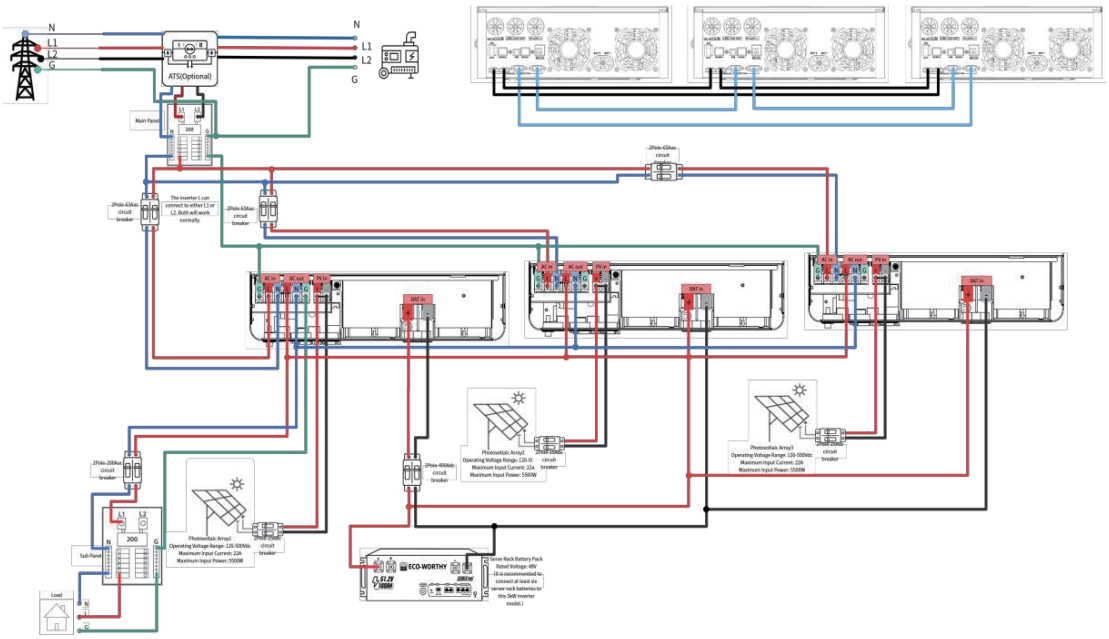

  - With MTS (Optional)

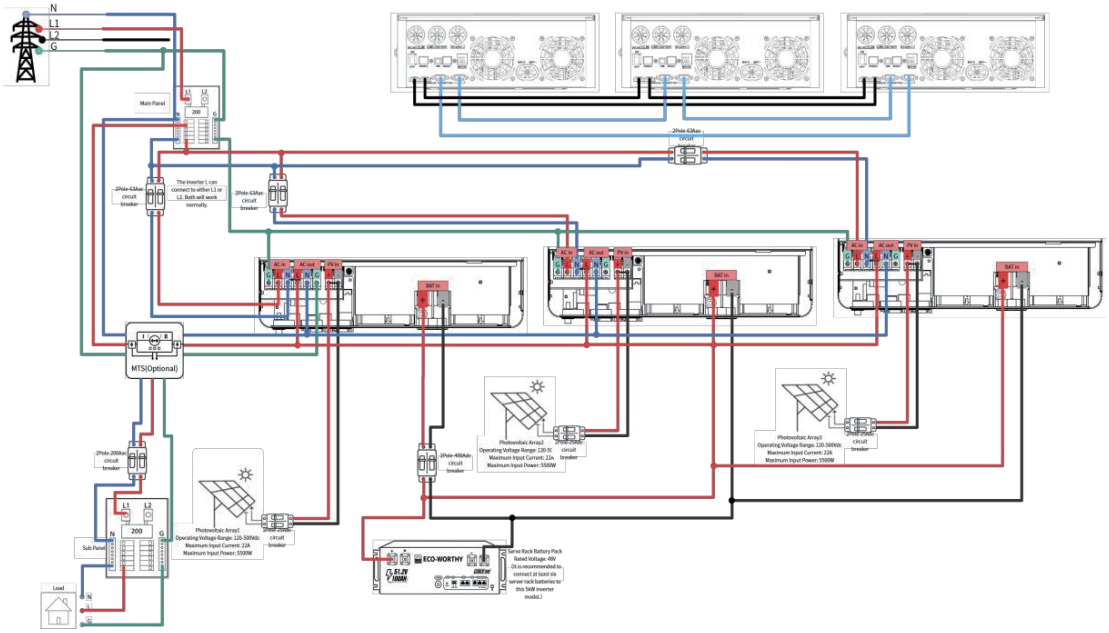

essvipsupport@eco-worthy.com.cn
https://www.eco-worthy.com/

- Single-phase with ***three*** 5kW inverter in parallel ***(Power mega Battery)***

  - With ATS (Optional)

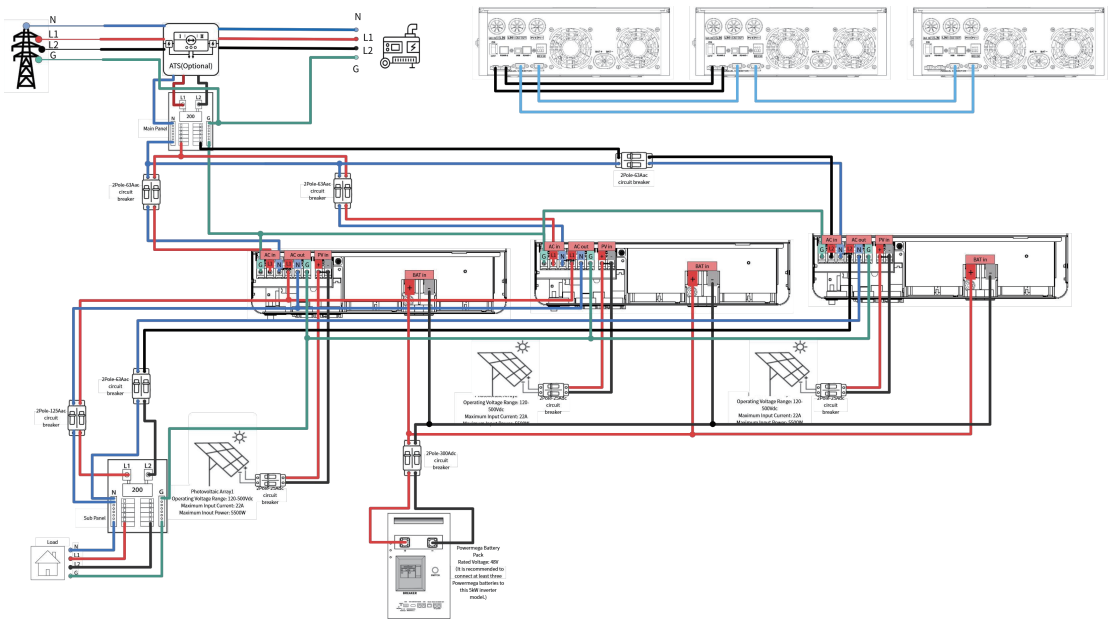

  - With MTS (Optional)

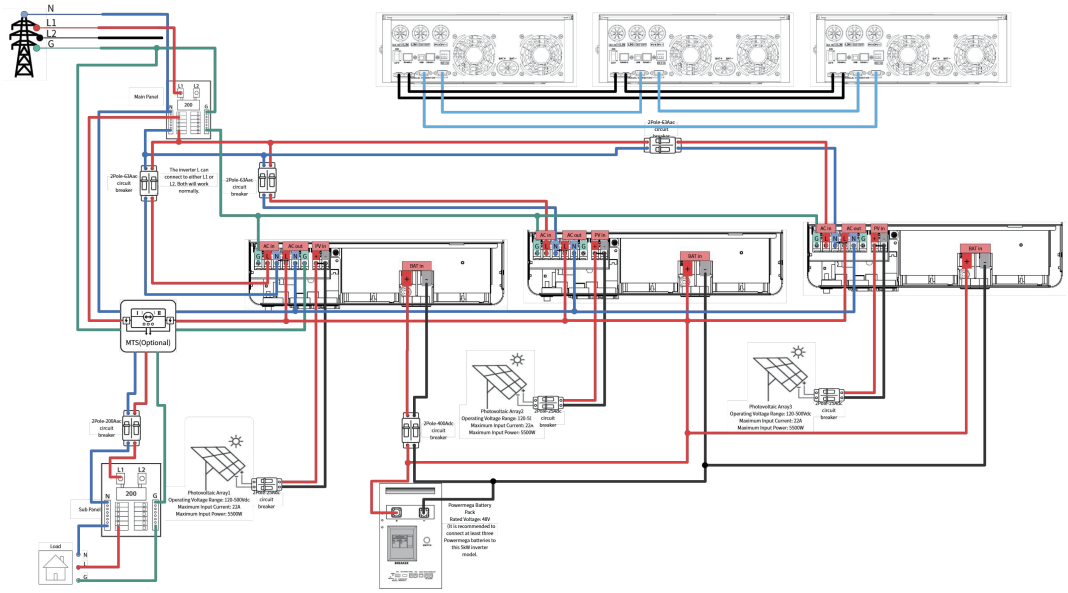

Configuration:

【08】--LF16
【30】--1/2/3(deviceID)
【31】--PAL
【32】--RS485
【33】--PYL

essvipsupport@eco-worthy.com.cn
https://www.eco-worthy.com/

II. Split-phaseconnection&configuration

- Split-phase with ***two*** 5kW inverters inparallel ***(Server Rack Battery)***

  - With ATS (Optional)

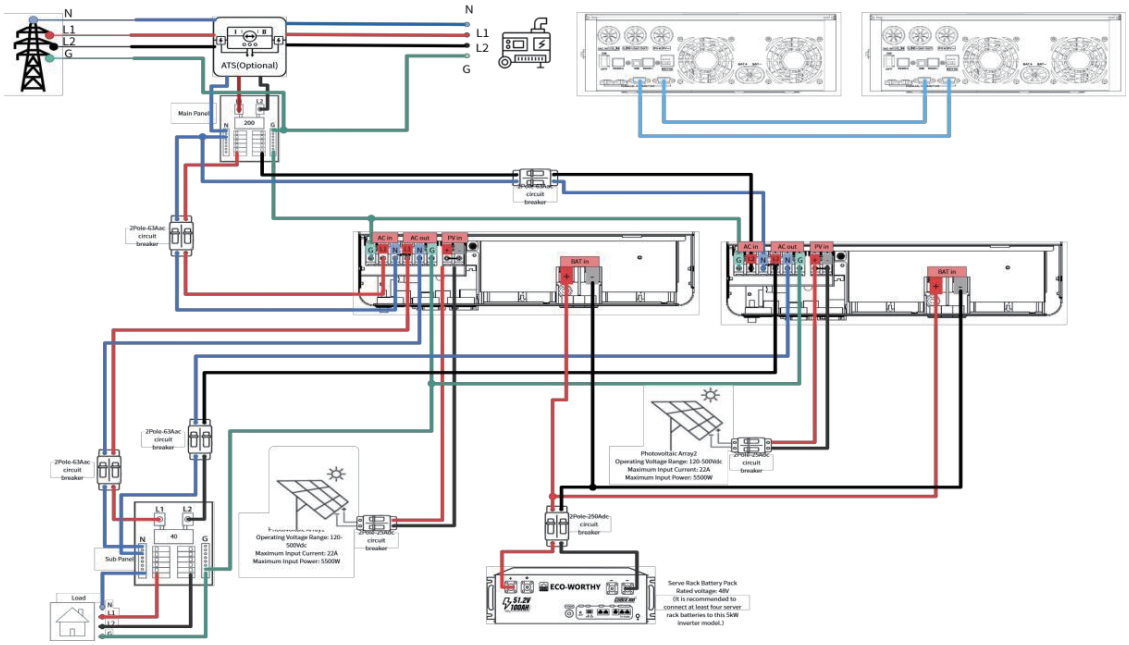

  - With MTS (Optional)

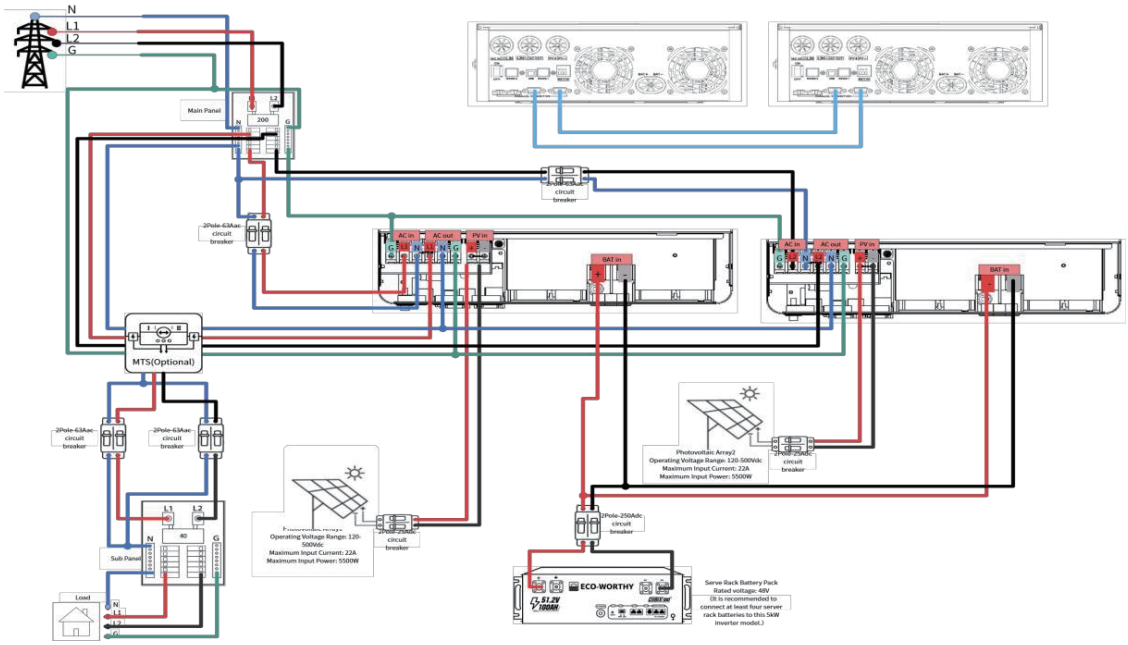

essvipsupport@eco-worthy.com.cn
https://www.eco-worthy.com/

- Split-phase with ***two*** 5kW inverters in parallel ***(Power mega Battery)***

  - With ATS (Optional)

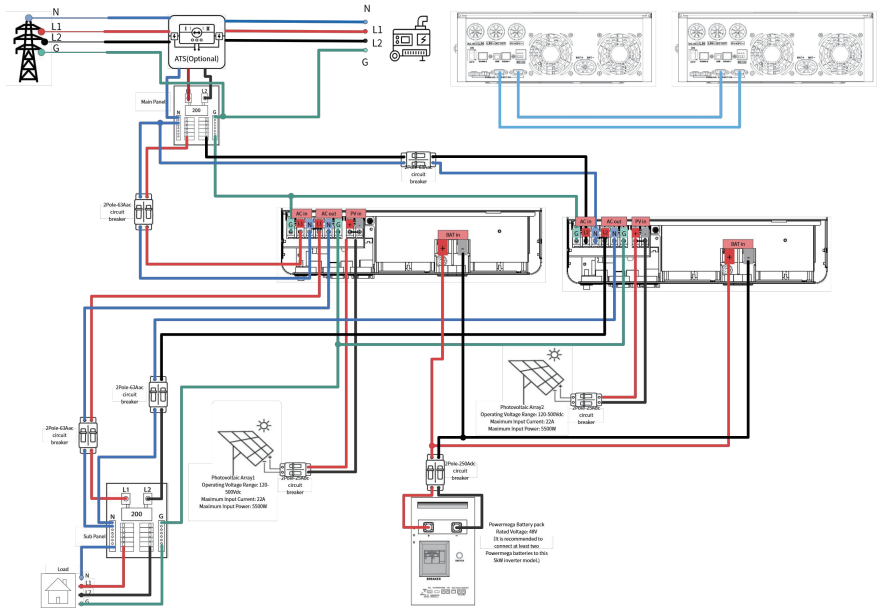

  - With MTS (Optional)

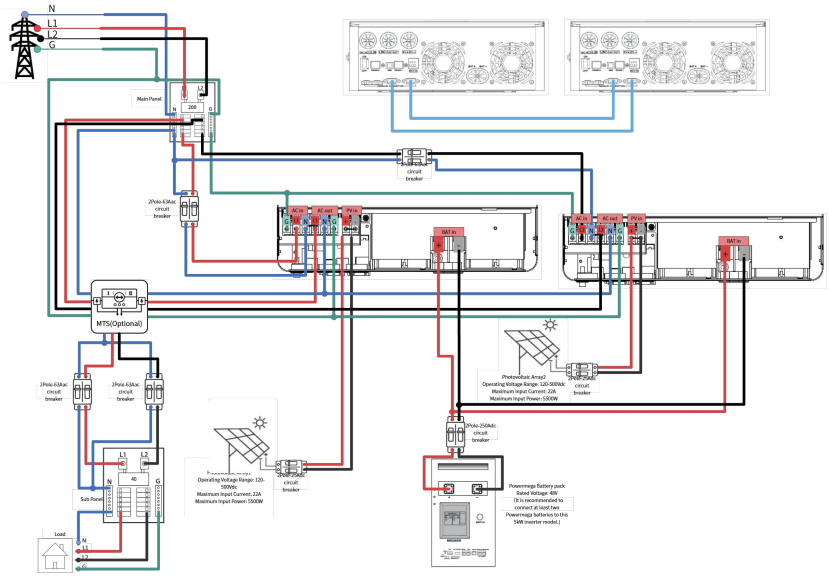

Configuration:
(For split-phase 208V)

--Inverter1
【08】--LF16
【30】--1
【31】--2P0
【32】--RS485
【33】--PYL

--Inverter2
【08】--LF16
【30】--2
【31】--2P1
【32】--RS485
【33】--PYL

essvipsupport@eco-worthy.com.cn
https://www.eco-worthy.com/

(For split-phase 240V)

--Inverter 1
【08】--LF16
【30】--1
【31】--2P0
【32】--RS485
【33】--PYL

--Inverter2
【08】--LF16
【30】--2
【31】--2P2
【32】--RS485
【33】--PYL

essvipsupport@eco-worthy.com.cn
https://www.eco-worthy.com/

- Split-phase with ***three*** 5kW inverters in parallel ***(Server Rack Battery)***

  - With ATS (Optional)

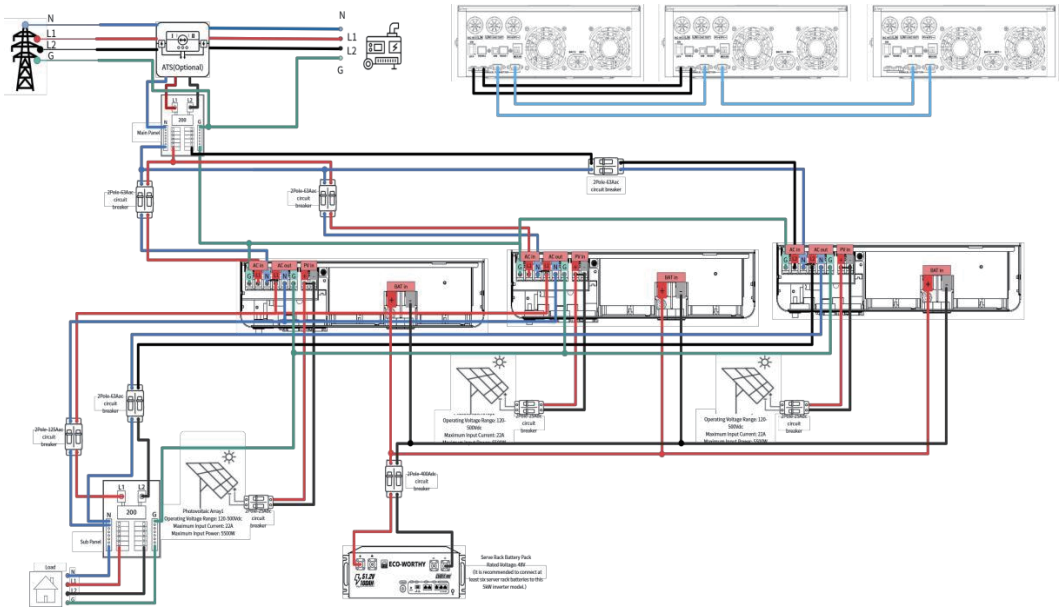

  - With MTS (Optional)

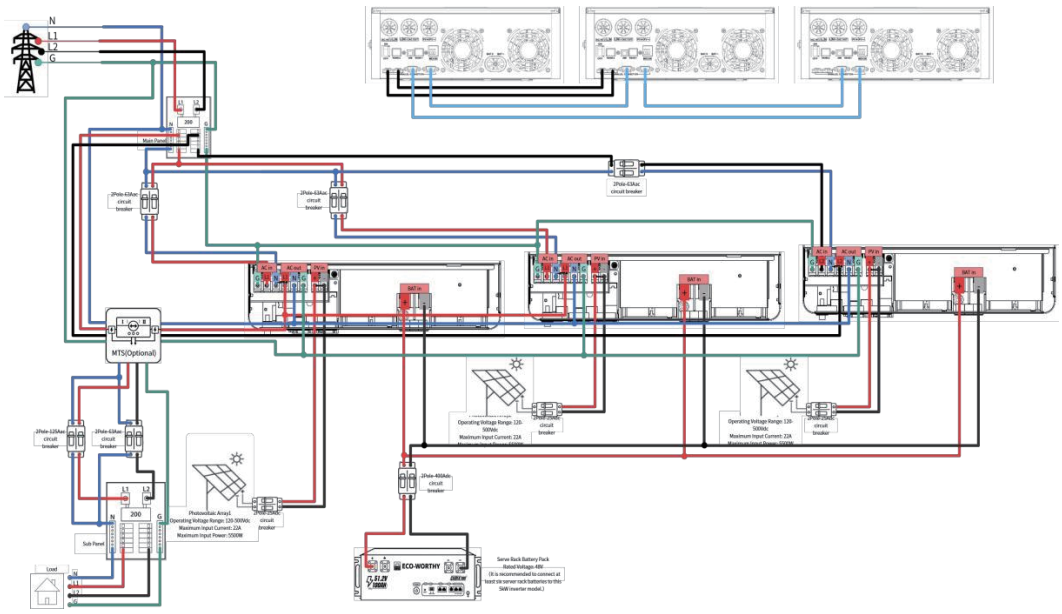

essvipsupport@eco-worthy.com.cn
https://www.eco-worthy.com/

- Split-phase with ***three*** 5kW inverter in parallel ***(Power mega Battery)***

  - With ATS (Optional)

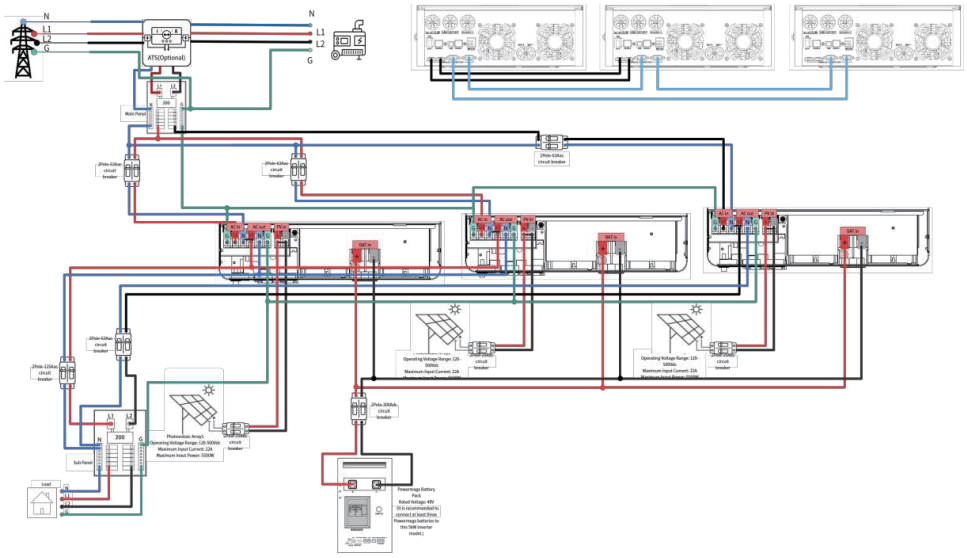

  - With MTS (Optional)

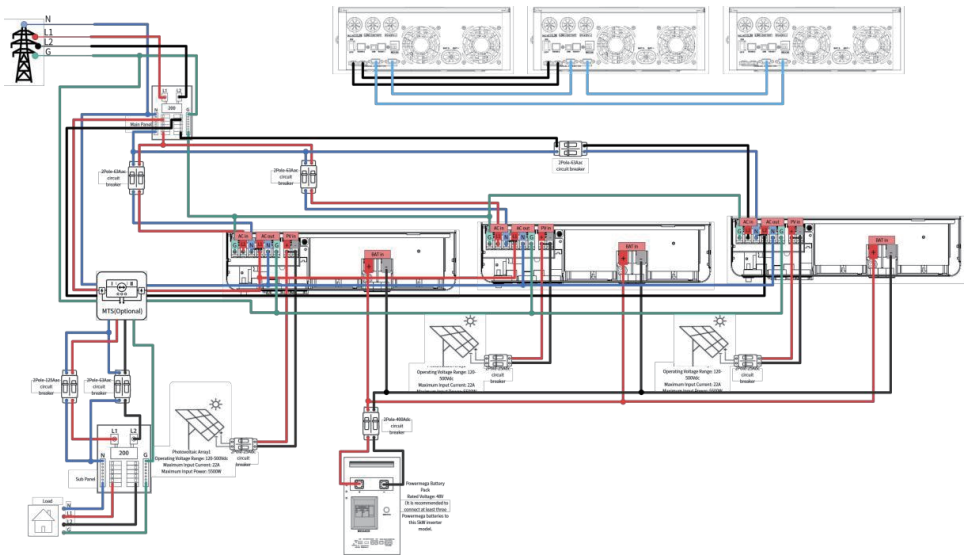

Configuration:
(For split-phase 208V)

--Inverter 1/2
【08】--LF16
【30】--1/2
【31】--2P0
【32】--RS485
【33】--PYL

--Inverter 3
【08】--LF16
【30】--3
【31】--2P1
【32】--RS485
【33】--PYL

(For split-phase 240V)

--Inverter 1/2

【08】--LF16
【30】--1/2
【31】--2P0
【32】--RS485
【33】--PYL

--Inverter 3

【08】--LF16
【30】--3
【31】--2P2
【32】--RS485
【33】--PYL

III. Three-phaseconnection&configuration

- Three-phase with three 5kW inverters in parallel ***(Server Rack Battery)***

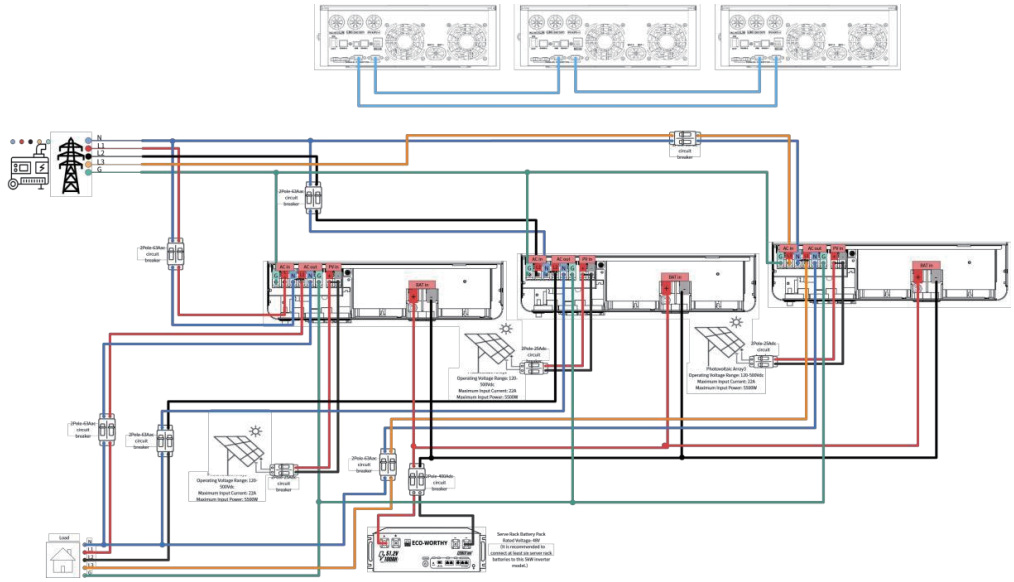

- Three-phase with three 5kW inverters in parallel ***(Power Mega Battery)***

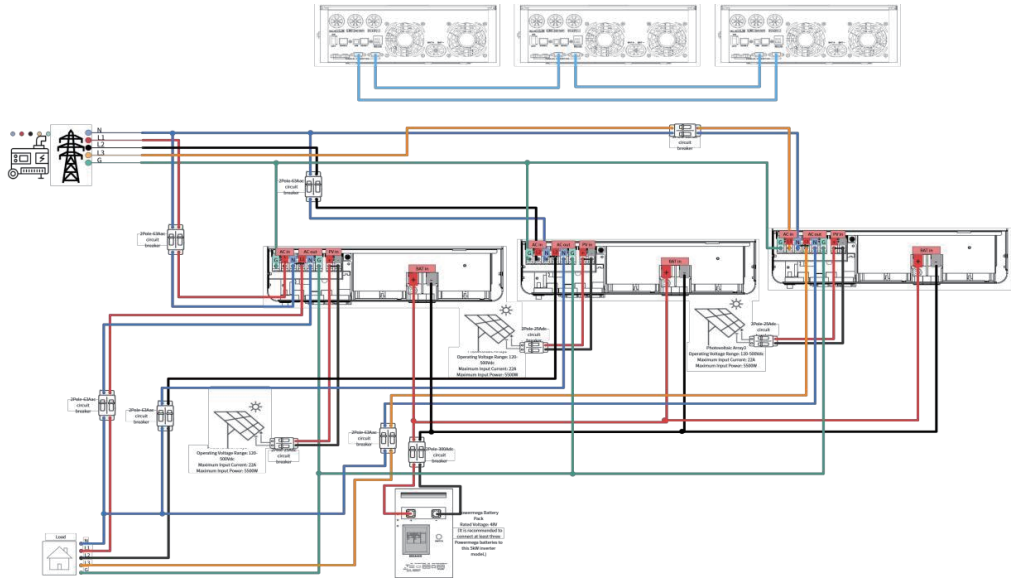

(For three-phase 208V)

--Inverter 1
【08】--LF16
【30】--1
【31】--3P0
【32】--RS485
【33】--PYL
【38】--120

--Inverter2
【08】--LF16
【30】--2
【31】--3P1
【32】--RS485
【33】--PYL
【38】--120

--Inverter3
【08】--LF16
【30】--3
【31】--3P2
【32】--RS485
【33】--PYL
【38】--120

essvipsupport@eco-worthy.com.cn
https://www.eco-worthy.com/

ECO-WORTHY

ENERGY FOR INDEPENDENCE

customer.service@
eco-worthy.com

Tel(DE): +49 6175 6514 999
Tel(US): 1-866-939-8222
Tel(UK): +44 7553 406988

www.eco-worthy.com