ECO-WORTHY

10kW AIO Inverter&Server Rack Battery Installation Guide



Version: A-4-V1.01

essvipsupport@eco-worthy.com.cn
https://www.eco-worthy.com/

ECO-WORTHY
ENERGY FOR INDEPENDENCE

Catalogue

1. Inverter instruction.....1

1.1. All-In-One Solar Charger Inverter Charger Manual 1

1.2. Package Include 1

1.3. Precaution 1

2. Battery instruction.....2

2.1. Cubix 100 Battery Manual.....2

2.2. Package Include 3

2.3. Precaution.....3

2.4. Battery Placement Method.....4

3. Inverter & Battery Installation & Configuration 4

3.1. Inverter Installation steps.....4

3.2. System Wiring Overview 7

3.3. Battery Wiring&Configuration.....8

3.4. PV Wiring.....13

3.5. Inverter Wiring&Configuration 13

3.6. Recommended Configuration Mode.....16

4. Parallel Inverter Connection&Configuration 18

4.1. Single-phase Parallel Inverter Connection&Configuration 18

4.2. Split-phase Parallel Inverter Connection&Configuration.....19

5. Wi-Fi Configuration 21

6. Whole Machine Power-On Test 21

6.1. Battery Voltage Check.....21

6.2. PV Voltage Check.....21

6.3. Grid Input Voltage Check 21

Disclaimer

This manual is intended solely as a guideline for the installation and operation of off-grid solar systems by qualified and licensed professionals. All installation, commissioning, and maintenance must be carried out in accordance with applicable local laws, regulations, and electrical codes.

Before using this manual, ensure that you fully understand the technical requirements and safety precautions associated with the equipment. The manufacturer shall not be held liable for any personal injury, property damage, or equipment failure resulting from improper installation, operation, or failure to follow the instructions provided in this manual.

This product involves high voltage and current and may pose risks including electric shock, fire, or other hazards. Users and installers must take appropriate safety precautions, including but not limited to:

- Using certified tools and personal protective equipment (PPE)
- Ensuring proper grounding of the system
- Performing installation and maintenance only when the system is powered off

The information in this manual is based on the latest available data at the time of publication. The manufacturer reserves the right to make changes to the product and documentation without prior notice.

If you have any questions regarding installation or operation, please contact authorized service personnel or technical support.

1. Inverter instruction

1.1.All-In-One Solar Charger Inverter Charger Manual

https://cdn.shopify.com/s/files/1/0253/9752/6580/-files/1101800027_10KW_-24-08-05.pdf?v=1771989439

1.2. Package Include

The 10KP Off-grid Inverter package should include all the items shown in the Component Guide. If there is any damage or missing part, please contact ECO-WORTHY's customer service team.

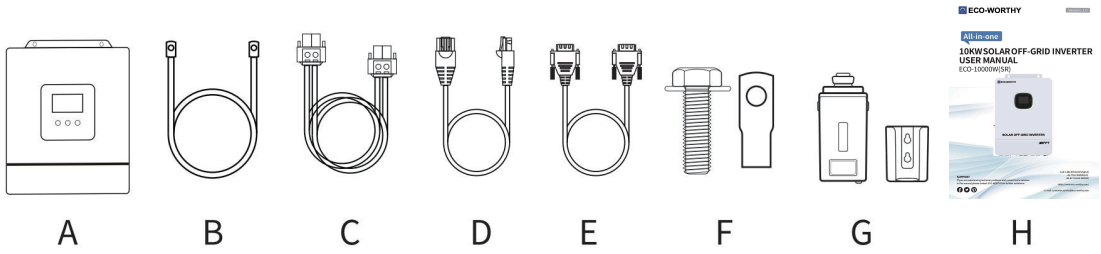

Components	Description	Quantity
A	Eco 10KP off-grid inverter	1
B	Battery Connection Cable	1
C	Isopotential lines	1
D	Battery-Inverter Communication Cable	1
E	Parallel Communication Cable	1
F	Screw Accessories	1
G	Wi-Fi Module	1
H	User Manual	1

1.3. Precaution

Please read this manual carefully prior to installation to familiarize yourself with the installation steps.

- Be very careful when installing the battery. Wear safe goggles when installing a lead-acid liquid battery. Once coming into contact with the battery acid, rinse with clean water timely.
- Do not place metal objects near the battery to prevent short-circuit of the battery.
- Acid gas may be generated when the battery is charged. So, please ensure good ventilation.
- When installing the cabinet, be sure to leave enough space around the all-in-one solar charge inverter for heat dissipation. Do not install the all-in-one solar charge inverter and lead-acid battery in the same cabinet to avoid corrosion by acid gas generated during battery operation.
- Only the battery that meets the requirements of the all-in-one unit can be charged.
- Poor connected connections and corroded wires may cause great heat which will melt the wire insulation, burn the surrounding materials, and even cause fires. So, make sure the connectors have been tightened, and the wires are secured with ties to avoid looseness of connections caused by shaking of wires during mobile application.
- The system connection wires are selected according to the current density of no more than $5A/mm^2$.
- Avoid direct sunlight and rainwater infiltration for outdoor installation.
- Even after the power is turned off, there is still high voltage inside. Do not open or touch the internal components, and avoid related operations until the capacitor completely discharges.
- Do not install the all-in-one solar charge inverter in harsh environment such as moist,oily, flammable or explosive, or heavily dusty areas.
- Polarity at the battery input end of this products shall not be reversed, otherwise it may damage the device or cause unpredictable danger.
- The mains input and AC output are high voltage, so please do not touch the wiring terminals
- When the fan is working, do not touch it to prevent injury
- Load equipment input power needs to confirm that this all-in-one solar charge inverter is the only input device, and it is forbidden to use in parallel with other input AC power to avoid damage. It is necessary to confirm that the solar charge inverter is the only input device for load equipment, and it is forbidden to use it in parallel with other input AC power to avoid damage.

2. Battery instruction

2.1. Cubix 100 Battery Manual

http://googcdn.shopify.com/s/files/1/0253/9752/6580/files/Cubix_100_Manual25.10.31-Online.pdf?v=1770963008

2.2. Package Include

The 51.2V 100AH Server Rack Battery package should include all the items shown in the Component Guide. If there is any damage or missing part, please contact ECO-WORTHY's customer service team.

General materials		
 Battery Pack *1pcs	 Manual *1pcs	 BMS & APP Quick Start*1PCS

Cables		
Type	**Details**	**Qty.**
Battery to Battery Communica-tion Cable		1PCS
Parallel Cables	A: Battery to Battery positive cable(2AWG 150mm RED) 	1PCS
	B: Battery to Battery negetive cable(2AWG 150mm BLACK) 	1PCS
Grounding Cable		1PCS

2.3. Precaution

- Do not impact the battery with heavy objects.
- Do not squeeze or pierce the battery pack.
- Do not throw the battery pack into the fire.
- Do not connect the battery in series.
- Do not expose the battery pack to the condition over 80℃.

- Do not put the battery near a heat source, such as a fire place.
- Do not expose the battery pack to direct sunlight or raining.
- Do not allow non-qualified person to disassemble the battery pack.
- Do not touch the battery pack with wet hands.
- Do not expose the battery pack to moisture or liquid environment.
- Do not short-circuit or reverse connect the battery
- Do not use chargers or discharging devices unapproved by the manufacturers to charge the battery.
- Do not mix batteries from different manufacturers or different kinds, types or brands.
- For safety, it is not recommended to use the battery near the ocean.

2.4. Battery Placement Method

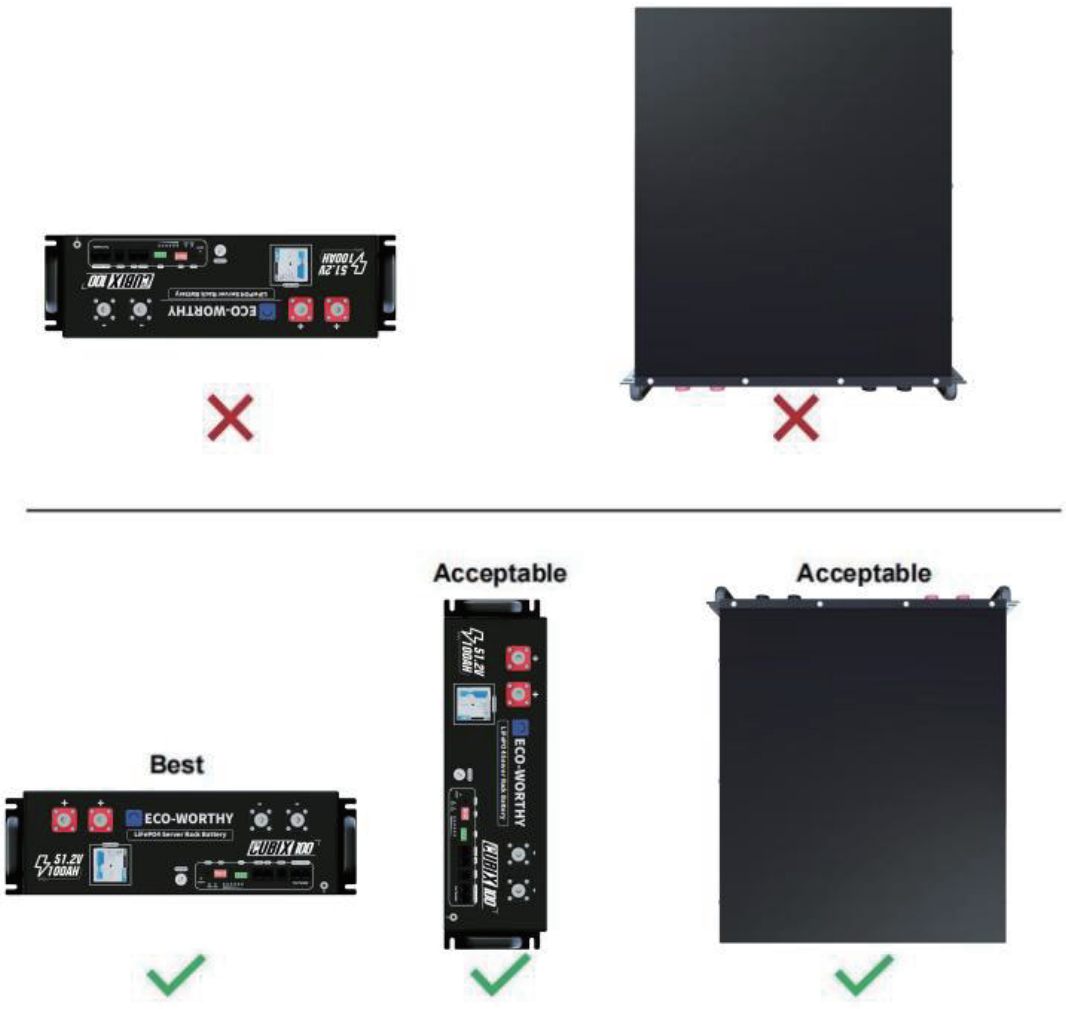

3. Inverter & Battery Installation & Configuration

3.1. Inverter Installation steps

3.1.1. Measurement of installation hole position:

Use a level (not included) to measure two center points on the mounting surface, with a

center-to-center distance of 230mm.

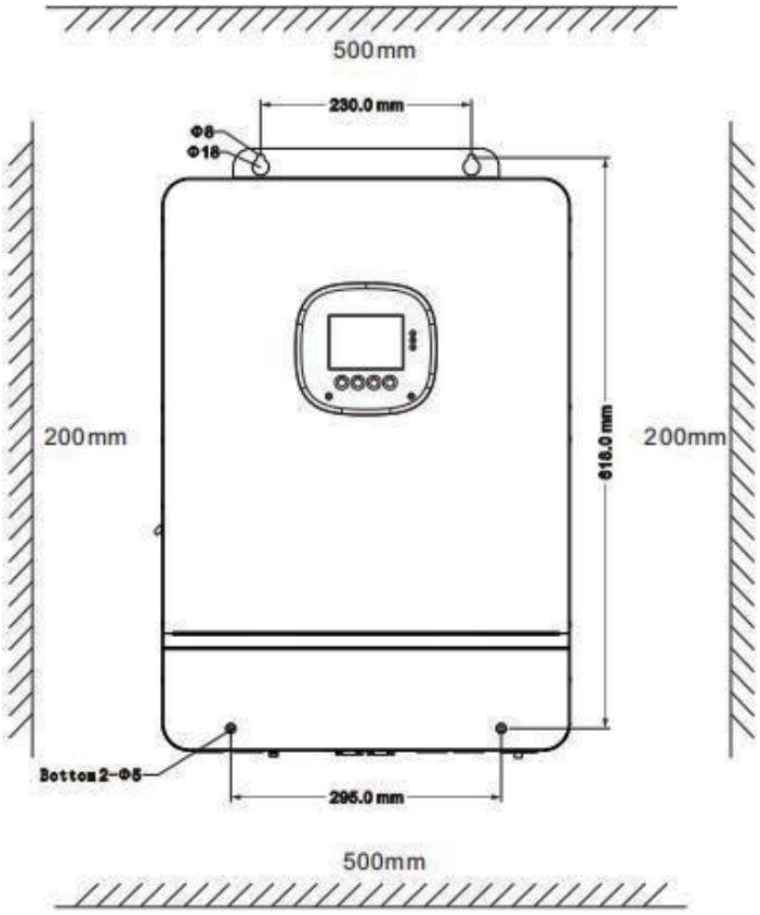

3.1.2. Drilling and installation:

A. Drill 4 installation holes of the specified sizes on the wall will an electric drill, insert 2 expansion screws above, and fix the inverter with 2 M5 screws below.

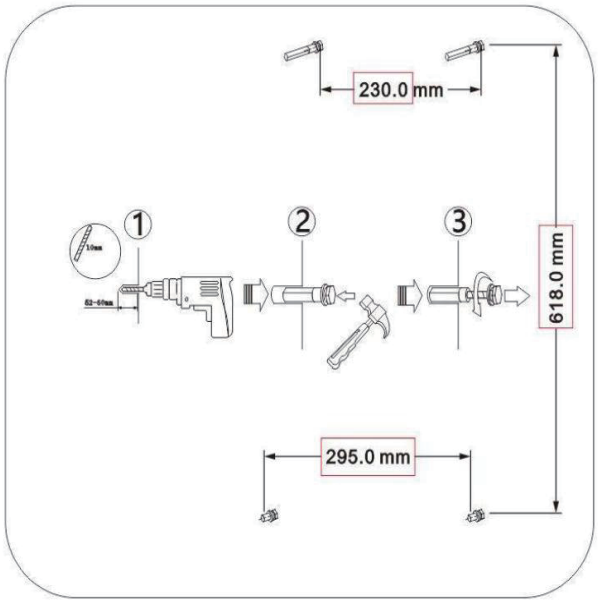

B. Remove the terminal cover and insect-proof net with a screwdriver.

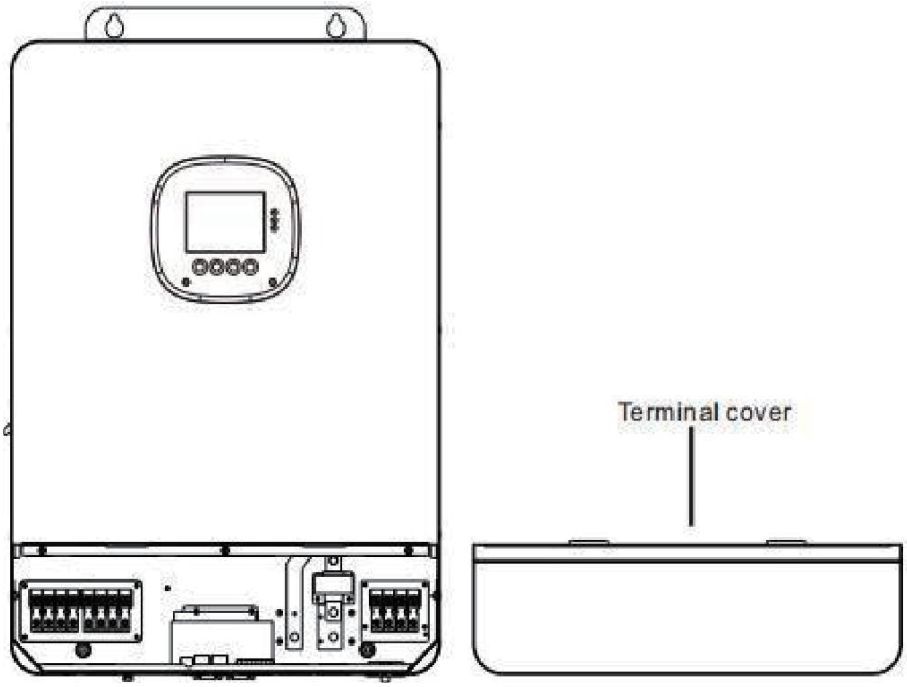

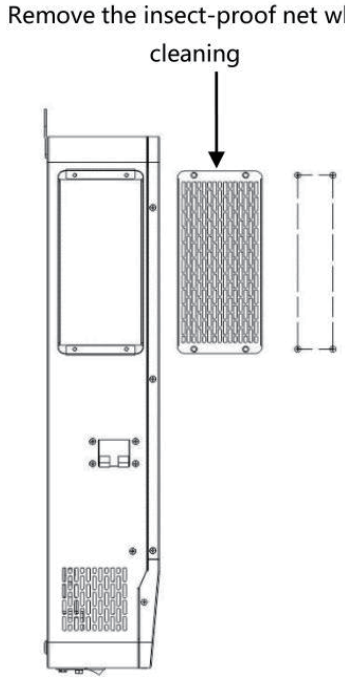

C. Inverter placement angle

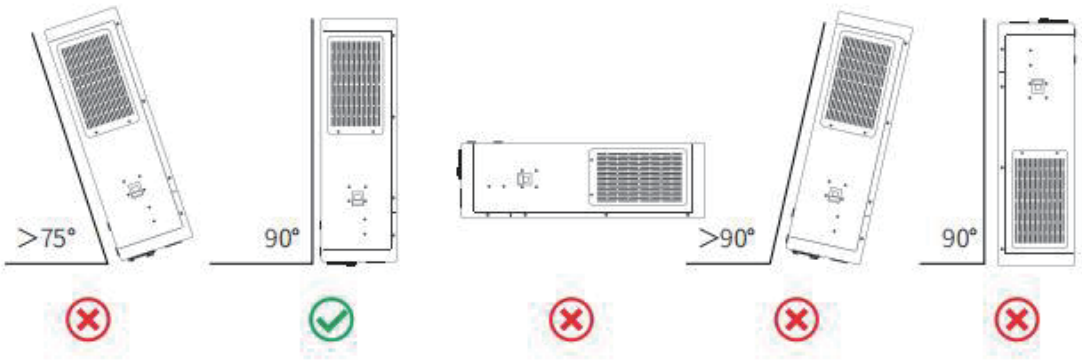

3.2.System Wiring Overview

3.2.1. Single-phase Wiring Diagram

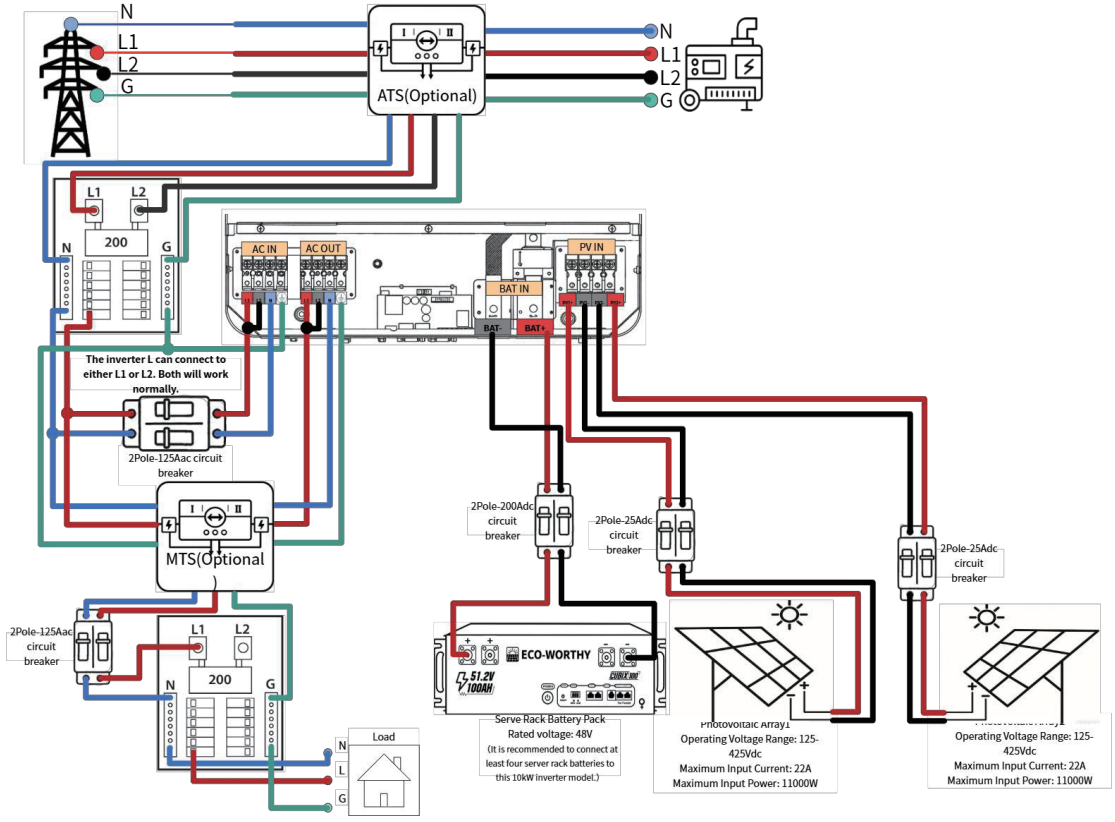

3.2.2. Split-phase Wiring Diagram

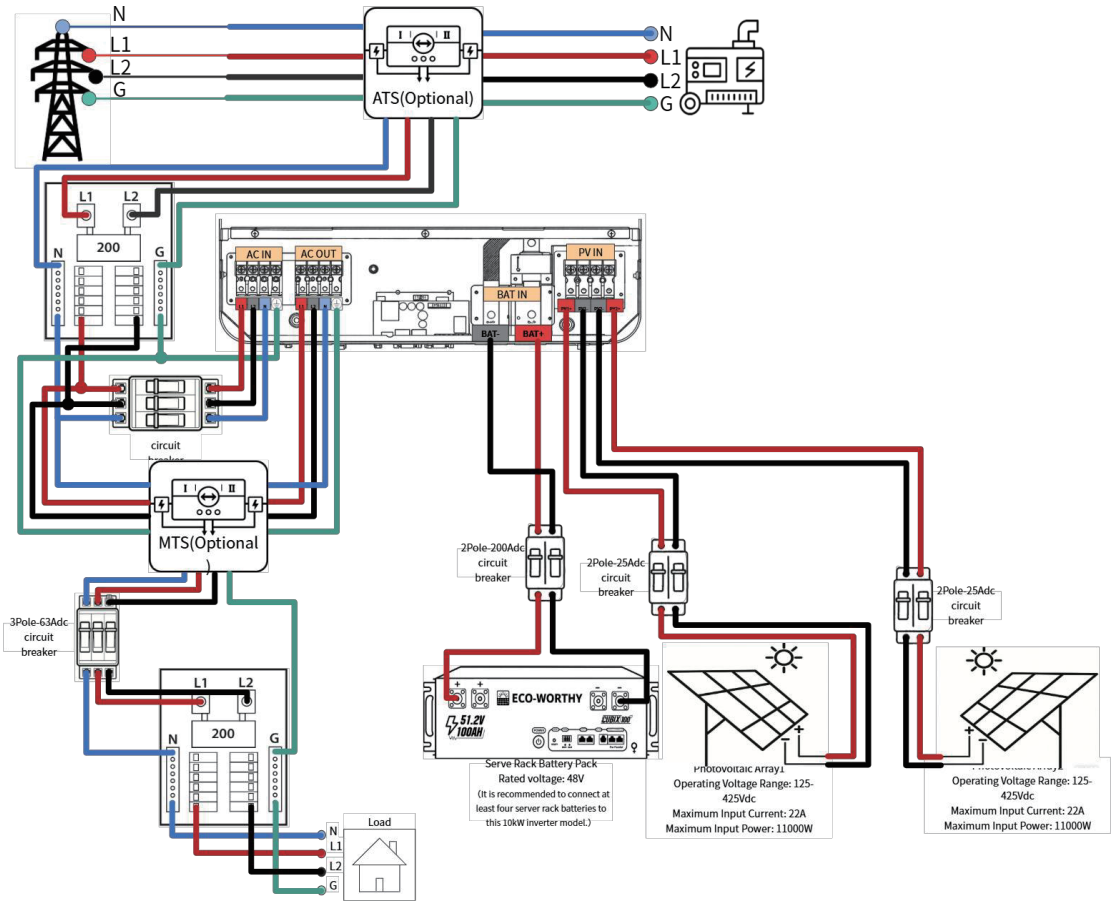

3.3. Battery Wiring&Configuration

The Eco 5KP off-grid inverter can use lithium batteries or lead-acid batteries. The battery pack voltage can be divided into 2 strings of 24V, 4 strings of 12V, 48V parallel, etc.....

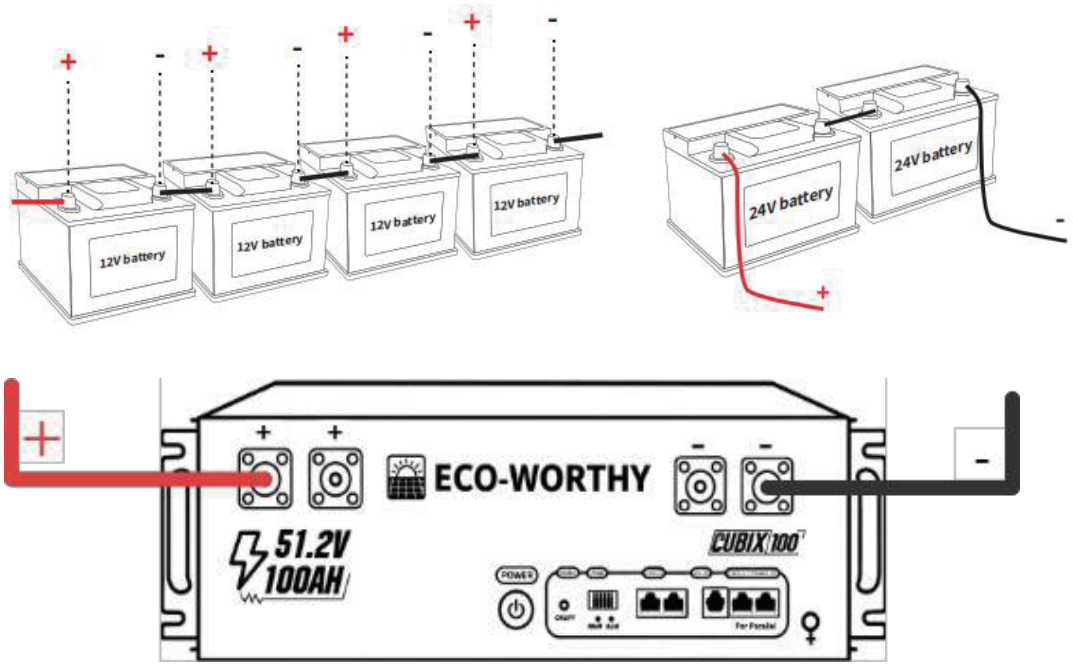

Please follow the steps below to correctly connect the batteries wires.

3.3.1. Wiring with Inverter

Step 1: Before connecting or disconnecting the wires, place all the circuit breaker are in ***off*** position. Ensure that the voltmeter shows ***no*** DC voltage.

Step 2: Use the recommended battery cable and terminal sizes for the connections (see table below).

Maximum Amperage	Wire Gauge Size	Terminal Size
125A	35mm^2/2AWG	Inverter end: M6 Battery end: M8

Step 3: Connect all batteries according to the device requirements.

Note: The recommended capacity for a 5KP inverter is ≥ 200AH. Therefore, it is recommended to connect at least ***two*** Cubix 100 server rack batteries in parallel.

Step4: Connect the positive battery cable (red) to the positive battery terminal (BAT+), and connect the negative battery cable (black) to the negative battery terminal (BAT-).

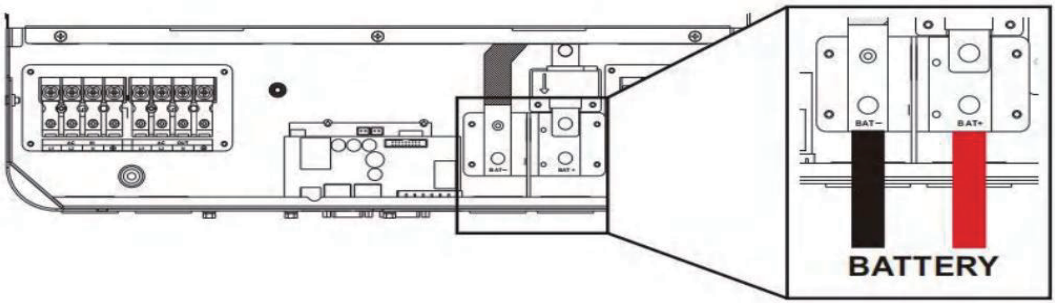

Step5: Ensure that the polarity is not reversed, as this will damage the equipment (the following is an example of ***incorrect*** connection)

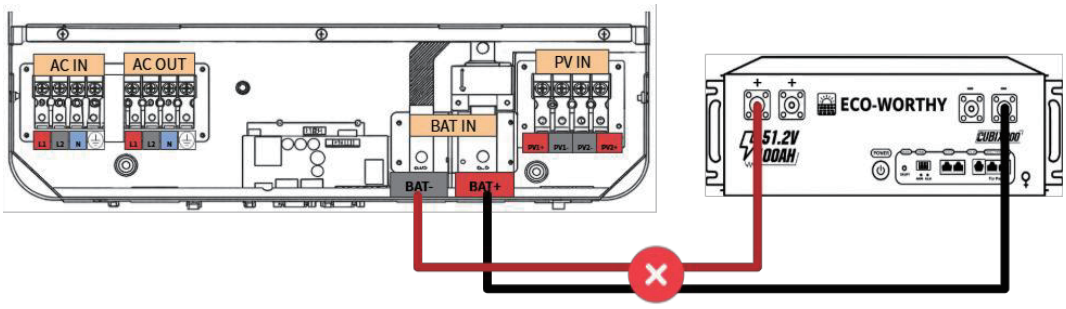

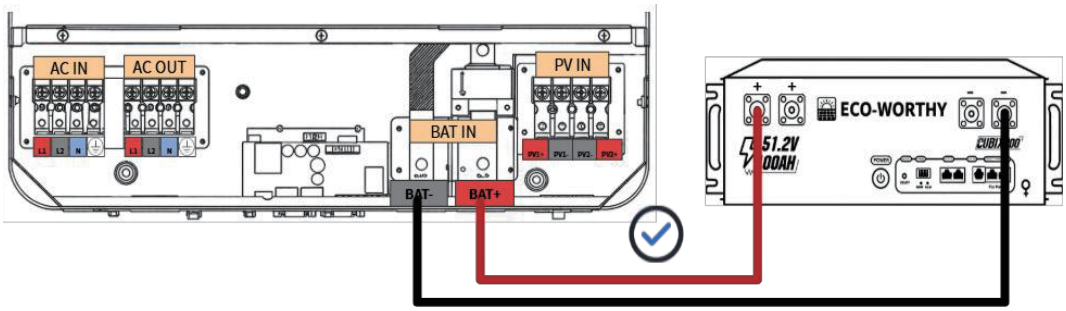

Warning:

Do not reverse the connections, connect to an unsuitable voltage range,or fail to disconnect the battery circuit breaker before connection.

If using parallel inverters, ensure they are connected to the same battery pack.

3.3.2. ESM100 Display Connection

Compatible Batteries:

A. Cubix 100 Server Rack Battery

B. Cubix 100 pro Server Rack Battery

C. 48V 100Ah Server Rack Battery V3

D. 48V 50Ah Server Rack Battery

E. 48V 100Ah Server Rack Battery V1/V2 (Can be monitored through the Cubix 100 as the master device without firmware upgrade)

For the 48V 100Ah Server Rack Battery V1/V2, although it is not directly compatible with the ESM100 display, if there is a 48V 100Ah Server Rack Battery V3 in the battery bank as the master battery, the display monitoring can be achieved through the V3 battery without firmware upgrade.

➢ Connection Method:

Connect the RS485-2 interfaces between batteries to establish communication between batteries and set master and slave addresses, and connect the ***RS232 interface*** between the battery and the screen.

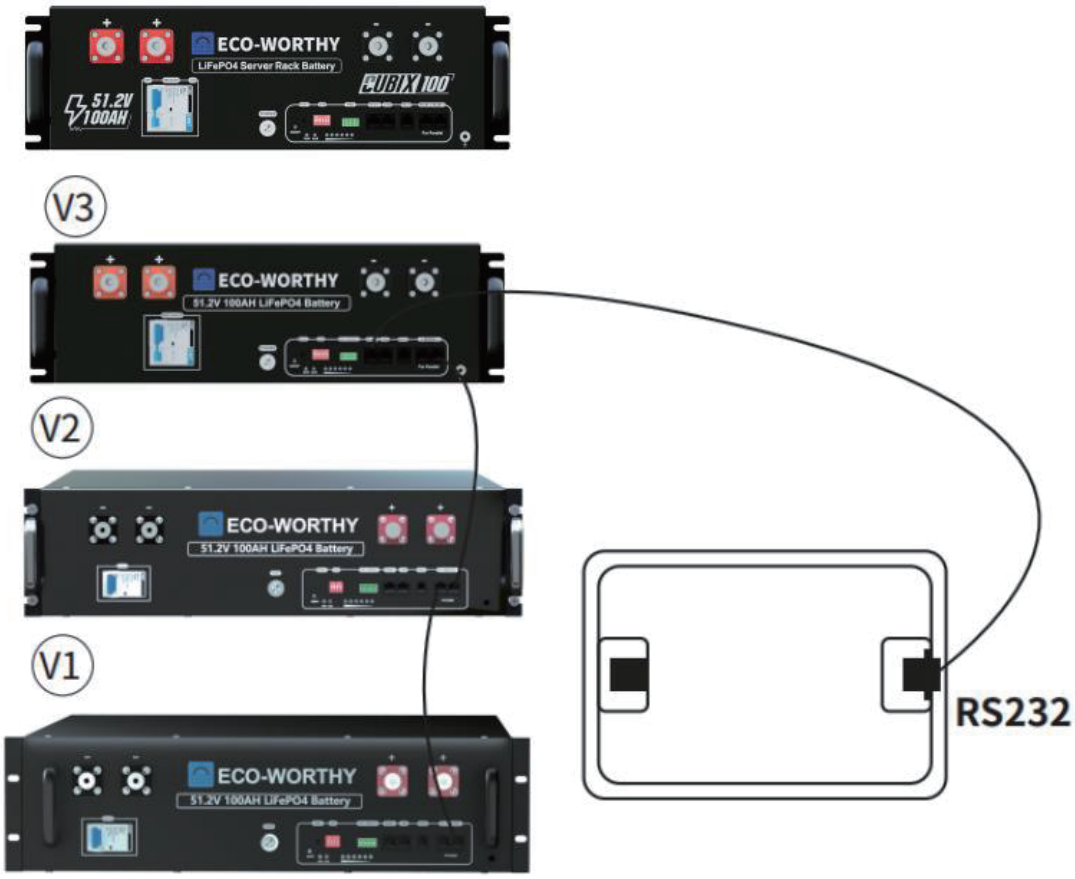

3.3.3. Multiple Battery Connection and Communication

If multiple batteries are connected in parallel and then connected to the inverter for connection and communication, please follow the steps below for connection and configuration.

Step1: For n (n≥2) batteries, use grounding wires to connect the casings in series, then use positive and negative cables for parallel connection, and connect the battery communication

cables (draw the communication cables from the second diagram onto the first diagram).



Step2: Set the battery DIP switch addresses, set the master battery to 1, and set the slave batteries sequentially from 2 to n. (For specific DIP switch definitions, refer to the user manual).

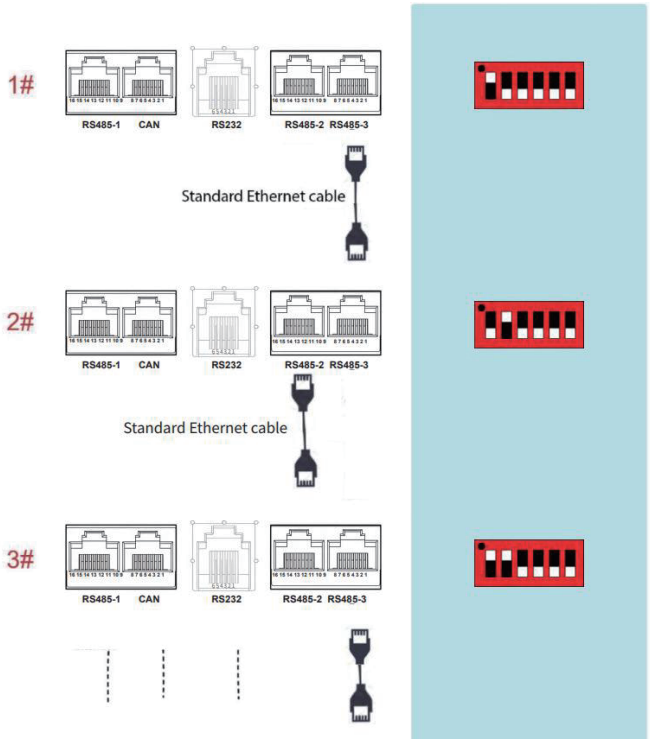

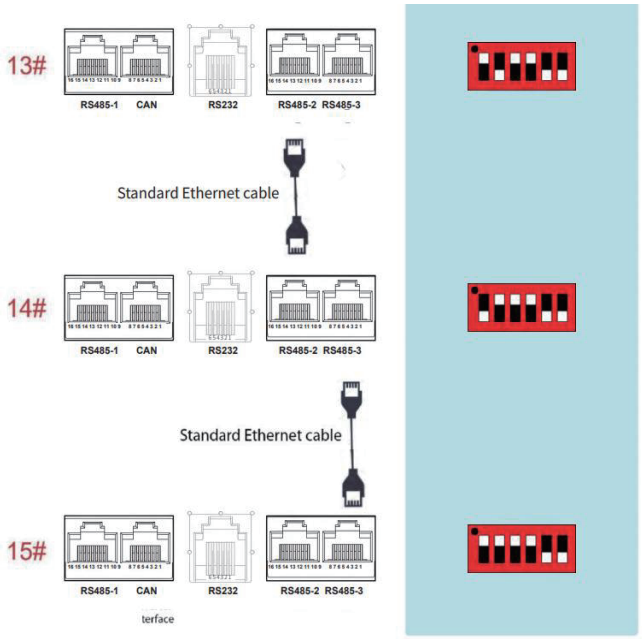

Step3: Connect the positive terminal of the master battery and the negative terminal of the last slave battery to the inverter, and establish communication through the communication port connected to the master battery and the inverter.

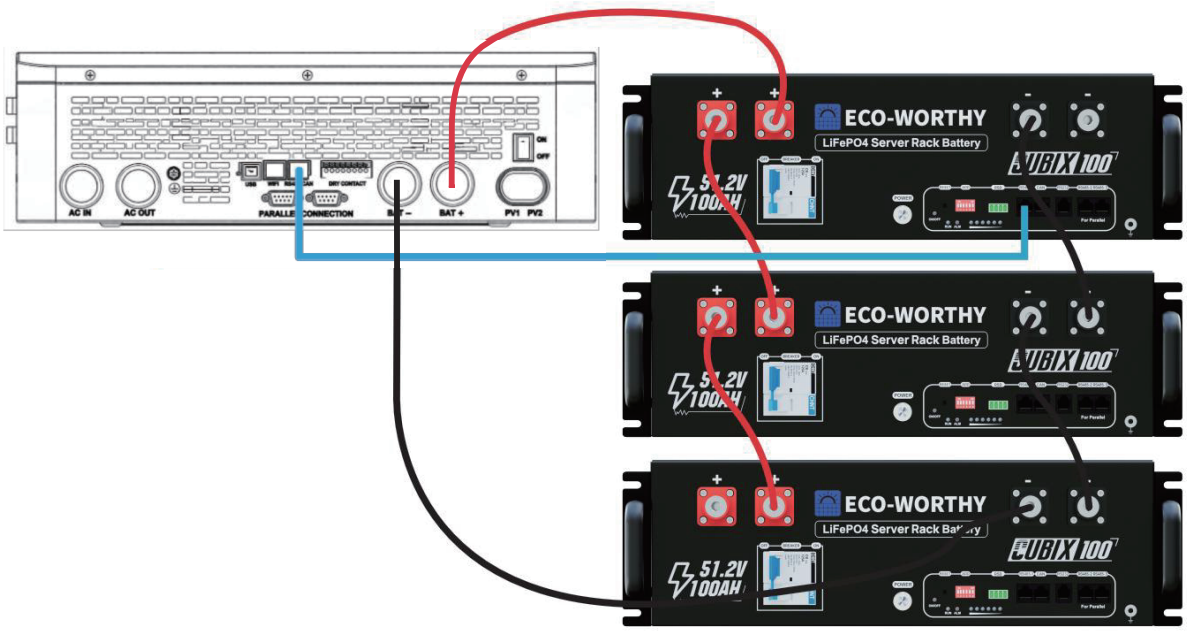

Note:

- Each battery must be ***fully charged separately*** before paralleling to ensure consistent voltage and prevent reverse current between batteries.
- The positive and negative terminals of the inverter need to be connected to the ***positive*** terminal of ***Battery 1*** and the ***negative*** terminal of the ***last*** battery to maintain balance.
- If communication is unsuccessful, the communication protocol of the master battery needs to be modified to ***match*** that of the inverter to ensure communication between the battery bank and the inverter.

3.3.4. Battery Configuration

- The default battery communication protocol is Pylontech.
- Adjust the 485 communication protocol of the battery to Pylontech.

3.4. PV Wiring

3.4.1. 10kW Inverter PV Terminal Specifications

PV Input Parameters	Range
Maximum Open-circuit Voltage	500Vdc
MPPT Operating Voltage Range	125-425Vdc
Maximum PV Input Power	11000W
Maximum PV Input current	22A
Number of MPPT Channels	2

3.4.2. PV Array Wiring Instruction

Install a separate DC circuit breaker/isolator between the inverter and the PV module. The recommended DC circuit breaker is a 2-pole 500V/25A. The recommended cable size for PV connection is 8 AWG(8mm^2). The wiring overview is shown in the following figure.

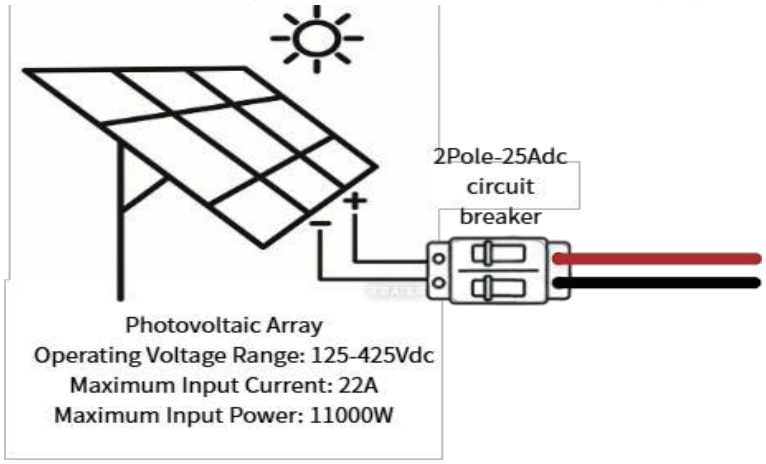

3.5. Inverter Wiring&Configuration

3.5.1. Wiring with Battery

After successfully installing the battery, please follow the steps below to enable closed-loop communication between the battery and the inverter (using a compatible battery module).

A. Connect the RJ45 Ethernet cable between the inverter and the battery. See the figure below.

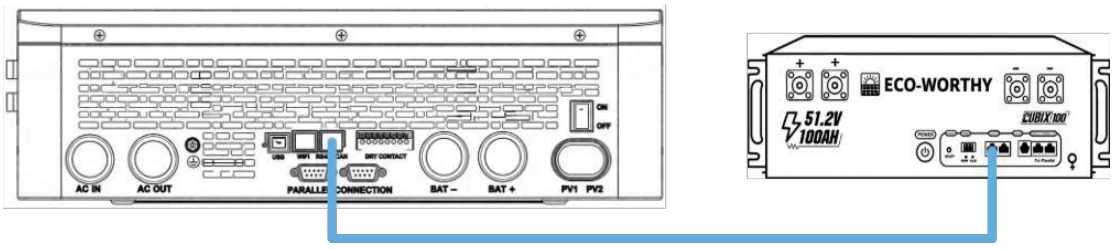

B. To enable communication between the inverter and the battery BMS, setting ***32*** must be adjusted to ***485***, and setting ***33*** to ***PYL*** （Click on the “settings” icon and the “up” or “down” arrow

icon to view the parameter. After selecting the desired parameter, click the “check” icon ）.

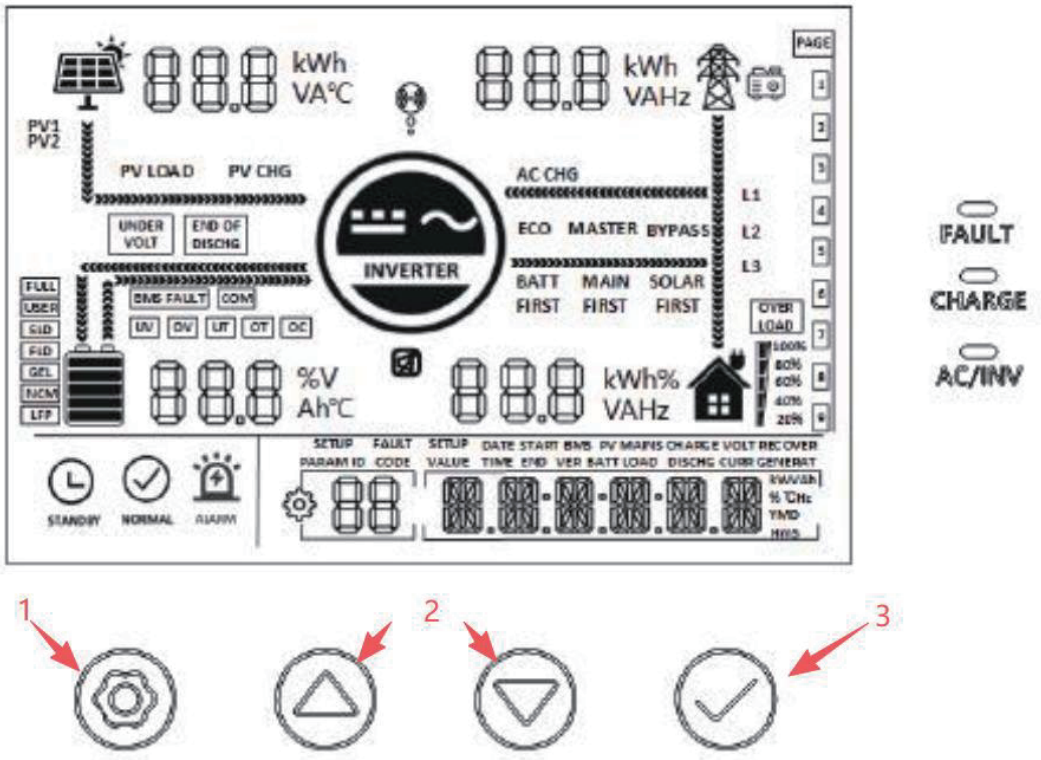

➢ Successfully communication: By using the page-turning key on the home page, you can see the SOC data displayed in the lower left corner of one of the pages.

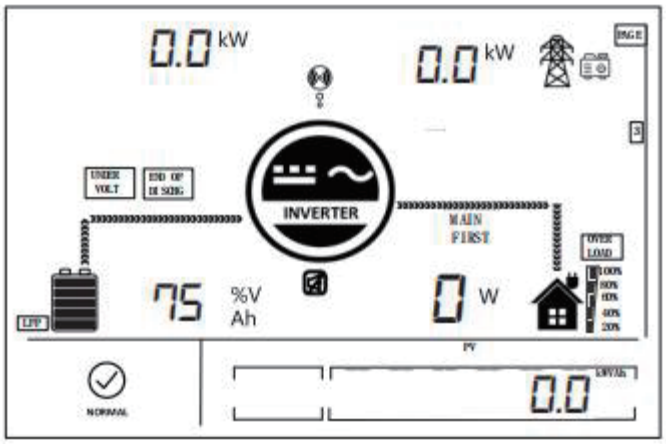

3.5.2. PV Connection

➢ Step 1: Before connecting the PV wiring to the inverter, ensure that all ***circuit breakers*** and ***disconnect switches*** are in ***off*** position, and use a multimeter to confirm that the PV string is not live, ensuring there is no DC voltage on the line. Once confirmed, proceed to the next step.

➢ Step 2: String 1/4-5/16 inches (6-8mm) of insulation from the positive and negative conductors of the PV string.

➢ Step 3: Thread the PV wires through the conduit fitting and into the inverter.

- Step 4: Locate the PV input terminal (See figure below).

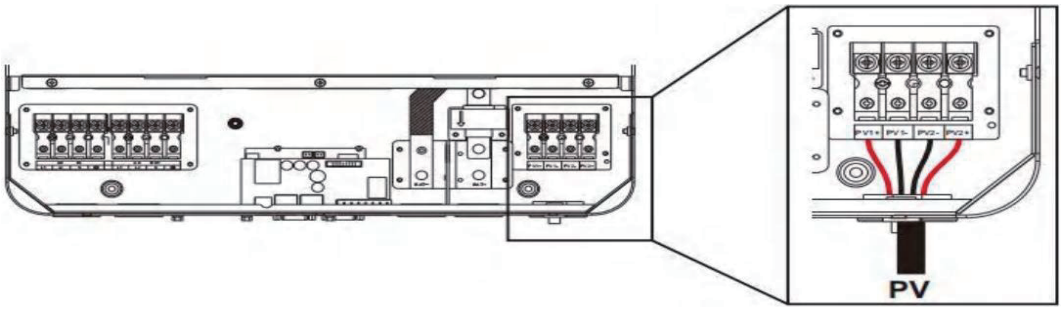

- Step 5: Insert the conduit fitting into the PV terminal and tighten the screws.
- Step 6: Ensure that the conduit and fittings are securely fastened and that the cable entry holes are sealed.
- Step 7: If using parallel inverters, the PV inputs of the two inverters need to be ***independent*** (see illustration).

3.5.3. AC Connection

A. AC Cable Requirements

Operating Mode	Recommended Wiring Size	Recommended Circuit Breaker
Split-phase Mode	13mm^2/6AWG	3P-63A
Single-phase Mode	13mm^2/6AWG(L1\L2) 26mm^2/3AWG(N)	2P-125A

B. Wiring Diagram

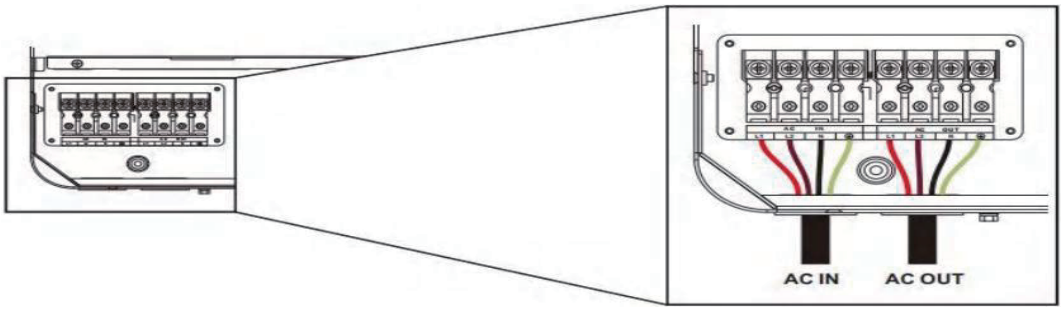

C. Wiring Steps

Step 1: Before installing any wiring, ensure that all ***circuit breakers*** are in the ***off*** position before making any connections. Use a multimeter to confirm that the AC input lines (L1,L2 and Neutral) are not live.

Step 2: Strip 5/26-3/8 inches (8-10mm) of insulation from the AC cable.

Step3: Connect the cables to the corresponding terminals as indicated in the diagram above, and secure the AC input and output wires to their respective terminals using the appropriate torque rating.

Note:

- For single-unit, connect L1 (black) to the L1 terminal and N (white) to the neutral terminal. Ensure that PE (ground) is securely connected to the PE terminal.

3.5.4. Inverter configuration

The default battery communication protocol is Pylontech and the default operating mode is split-phase mode.

Modify option 32 of the inverter to “485”.
Modify option 33 of the inverter to “PYL”.
Modify option 68 of the inverter to “180”.

3.6. Recommended Configuration Mode

3.6.1. Recommended Use of Battery Mode

Mode Name	Working Principle	Applicable Scenarios	Important Prerequisites
LFP15/LFP16/LFP16 Battery Type--item 8	LFP14/LFP15/LFP16 are corresponding to Battery Series of 14, 15 and 16, and their default constant charge voltages are 49.6V, 53.2V and 56.8V respectively, which can be adjusted.	The inverter can control system operation based on the battery's actual SOC. In the absence of an established communication link, the inverter can only determine the battery's status by monitoring its voltage, which may result in inaccurate data.	It’s required to ensure that the pins on the communication cable correspond correctly to the interface.
485 Communication Function--item 32	RS485-2 port for 485 communication		
PYL BMS Communication Protocol--item 33	When [32] enables BMS communication, the corresponding lithium battery manufacture brand should be selected for communication		PAC=PACE, RDA=Ritar, AOG=ALLGRAND BATTERY, OLT=OLITER, HWD=SUNWODA, DAQ=DAKING, WOW= SRNE, PYL=PYLONTECH,UOL=WEILAN

3.6.2. Recommended Use of Charging Mode--item 06

Mode Name	Working Principle	Advantages	Disadvantages	Applicable Scenarios	Important Prerequisites
SNU/Hybrid Mode	Primarily charges using PV power, and the grid automatically supplements	Flexible complementarity, ensures battery charge, good economic efficiency.	Some grid electricity costs will still be incurred.	For occasions with unstable sunlight or significant load charges, balancing economic and reliability.	PV/grid hybrid charging is only possible when there is a load on the bypass output; PV

	when PV power is insufficient; the grid stops charging when PV power is sufficient.				charging can only be initiated when there is a load on the inverter output.
CUB/AC 1st Mode	Prioritizes grid power for battery charging; switches to PV charging only when the grid power fails.	Fast and stable charging speed, unaffected by weather, simple and reliable system.	No use of green energy, highest electricity cost.	For occasions with stable grid power and low electricity prices, or when the PV system capacity is small.	/
CSO/PV 1st Mode	Priority PV charging; grid charging is only initiated when PV charging fails.	Energy-saving and environmentally friendly, low operating costs.	Charging speed is subject to lighting conditions.	For occasions where green energy is to used as much as possible.	/
OSO Mode	Supports only PV charging, completely rejecting grid charging	Zero electricity bills, zero grid dependence, 100% green energy.	Completely dependent on the weather, unable to charge without sunlight.	For completely off-grid scenarios with extreme environment requirements (requires large-capacity PV and batteries)	Supports only PV charging, completely rejecting grid charging.

3.6.3. Recommended Use of Discharge Mode--item 01

Mode Name	Working Principle	Advantages	Disadvantages	Applicable Scenarios
UTI/AC 1st Mode	When the grid power is normal, it	High power supply stability,	High electricity cost, not fully	Areas with stable grid

1.	directly supplies power to the load; when the grid power fails, it automatically switches to the inverter (battery) for power supply.	less battery usage, longer battery life.	utilizing solar energy, not energy-saving.	power and low electricity prices; daily use scenarios with high requirements for power supply continuity.
SBU Mode	Prioritizes using the battery (inverter) to supply power to the load; automatically switches back to grid power when the battery voltage is too low.	Full utilization of energy storage, saving electricity costs (especially during peak electricity prices)	Increased battery cycle count, which may affect lifespan; if battery capacity is small, frequent switching may occur.	Area with a large difference between peak and off-peak electricity prices; scenarios where maximum electricity cost savings are desired.
SOL/PV 1st Mode	Priority using solar power to supply the load; switches to grid power when PV fails or battery voltage is too low.	Maximizes the uses of green energy, energy-saving and environmentally friendly, low operating costs.	Power supply stability is greatly affected by weather, and power supply may be insufficient on cloudy or rainy days.	For occasions with sufficient sunlight and installed PV systems; off-grid or weak grid areas.

4. Parallel Inverter Connection&Configuration

For details regarding multi-unit parallel operation (involving more than two units), please refer to the inverter's user manual.

Section 4.9.3: Single-phase Parallel Wiring Diagram

Section 4.9.4&4.9.5: Split-phase Parallel Wiring Diagram.

4.1. Single-phase Parallel Inverter Connection&Configuration

4.1.1. Single-phase Parallel Inverter Connection

The wiring overview is shown in the following figure (taking the parallel connection of 2 inverters as an example).

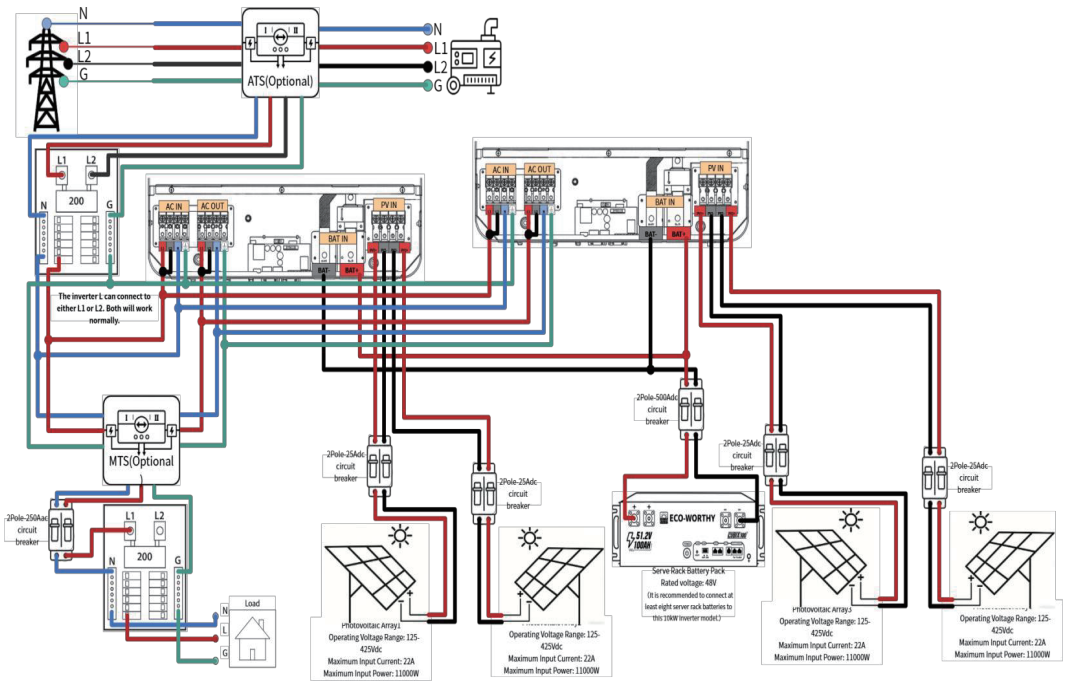

4.1.2. Single-phase Parallel Inverter Configuration

Set the option ***31*** of ***two inverters*** to ***PAL***.

4.2. Split-phase Parallel Inverter Connection&Configuration

4.2.1. Split-phase Parallel Inverter Connection&Configuration(Method 1)

a. Set the option 30 & 31 of the ***inverter 1*** to ***1*** & ***2P0***,and the option 30&31 of ***Inverter 2*** to ***2&2P2***.

b. Connect L1 (black) to the first inverter and L2 (red) to the second inverter, then bridge the L1 and L2 terminals of the two inverters respectively.

The wiring overview is shown in the following figure (taking the parallel connection of 2 inverters as an example).

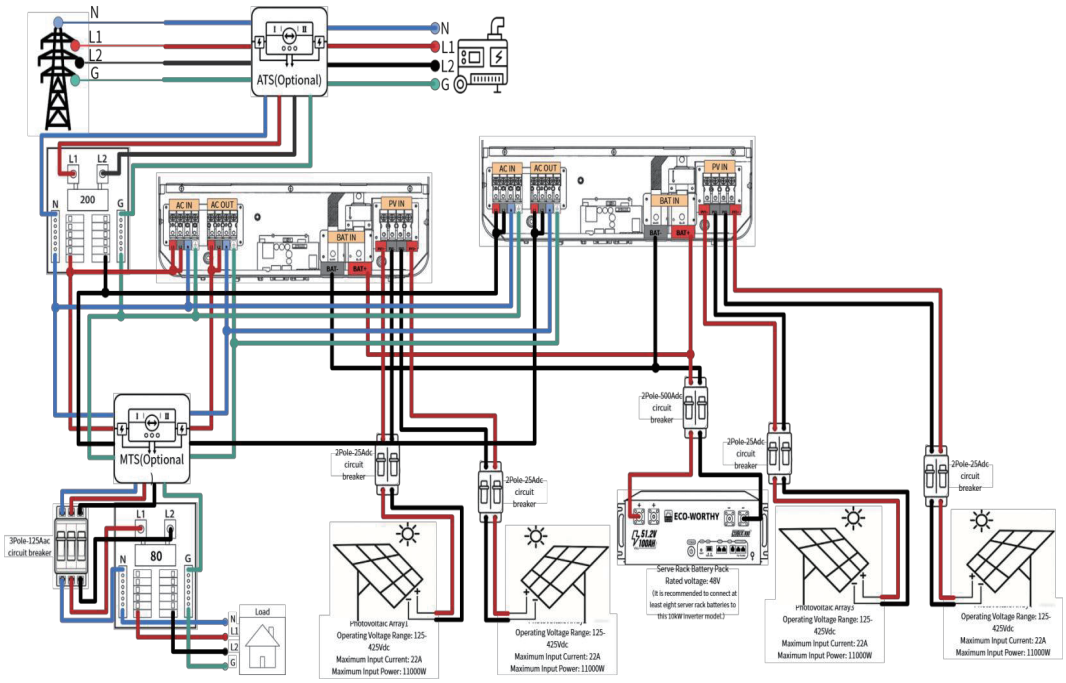

4.2.2. Split-phase Parallel Inverter Connection&Configuration(Method 2)

a. Set the option ***30*** of the ***inverter 1*** to ***1*** , the option ***30*** of ***Inverter 2*** to ***2***, and the option ***31&68*** of these two inverters to ***PAL&180.***

b. Connect L1 (black) and L2 (red) to the L1 and L2 terminals of the two inverters, respectively.

The wiring overview is shown in the following figure (taking the parallel connection of 2 inverters as an example).

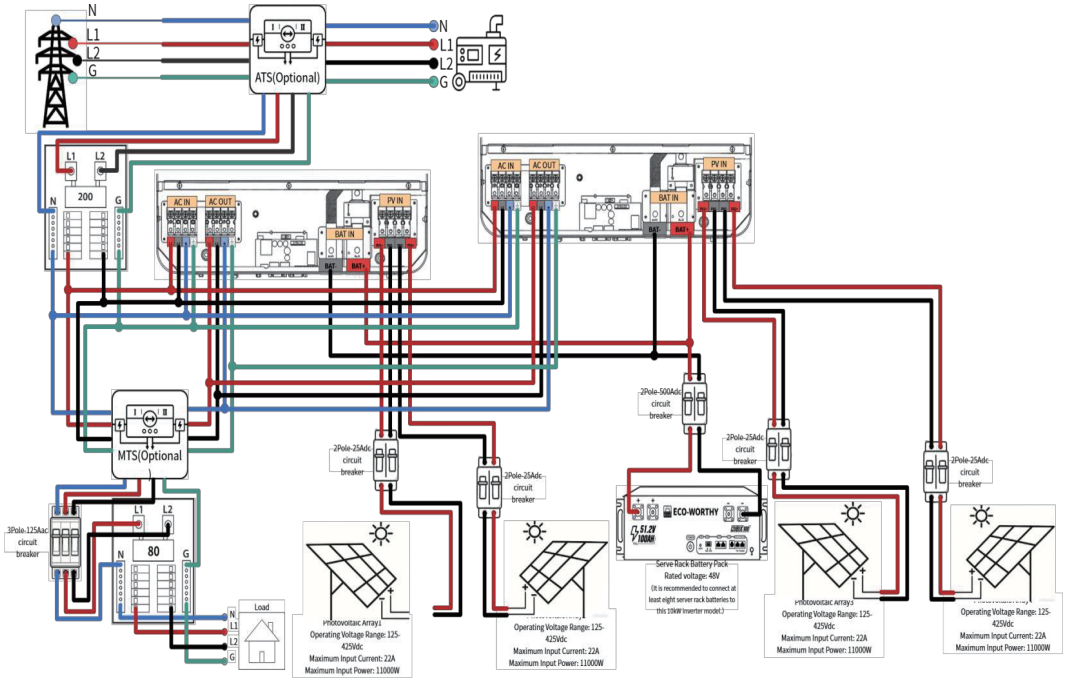

Note: If the device has already started operating, please power it off and immediately access the inverter settings page to modify the options; otherwise, once the inverter screen goes completely dark, no further modifications can be made.

5. Wi-Fi Configuration

A. Due to certain limitations of the Wi-Fi Dongle, please ensure that the signal and security settings of your home Wi-Fi network meet the following requirements:

The Wi-Fi adapter ***only*** supports wireless networks on the ***2.4GHz*** band. If the router supports 5GHz or 6GHz network frequencies, please confirm that the router supports the 2.4GHz network band and that it is enabled.

B. The Wi-Fi dongle is only compatible with WPA1,WPA2 and WPA3 security protocols on the 2.4GHz network.

C. Ensure that the home Wi-Fi router has DHCP (Dynamic Host Configuration Protocol) settings enabled to allow the Wi-Fi dongle to obtain an IP address.

D. It is recommended that the home Wi-Fi network name be ***no*** more than 19 characters long and the password be ***no*** more than 24 characters long. The following ***special characters*** are ***not*** recommended in the password: @, #, $, %, &, *, <, >, ?, or spaces (keyboard space bar).

*For detailed instructions on using the Wi-Fi Dongle, please refer to the relevant manual.

Wi-Fi Module Usage Tutorial

6. Whole Machine Power-On Test

6.1. Battery Voltage Check

A. Check the battery voltage, which must be between 43V and 63V.

B. If applicable, turn on the internal switch of the battery. Measure the voltage of each battery.

C. Verify that the voltage of the battery pack at the terminal is sufficient.

6.2. PV Voltage Check

A. The input voltage must not exceed 425V.

B. The input voltage must be higher than the start-up voltage of 125V.

C. Do not ground PV+ or PV-.

D. Check the polarity of each PV string. If the polarity is reversed, inverter will measure 0Vdc, which can cause long-term damage.

E. When only PV is connected, the LCD screen will light up, but the inverter will not operate.

6.3. Grid Input Voltage Check

A. Use a multimeter to measure the AC voltage at the “GRID” terminals.

B. Measure the voltage from line (L) to neutral (N) at the “GRID” terminals. Ensure that all phase voltages are 120V.

C. Measure the line voltage (L) at the “GRID” terminals. Ensure that the voltage is 240V. (If the voltage reading is close to 220V or 210V, confirm whether the grid is single-phase or three-phase).

D. Verify that the voltage between the neutral and grounds is 0V.

E. Confirm that the voltage between “Grid” L1 and “Load” L1 is 0V. Do the same for L2.

Safety Notice

To ensure electrical safety, if any issues arise during system installation, please contact ECO-WORTHY customer service team for professional assistance.