ECO-WORTHY

Version: 1.0

3.5KW STACKABLE ENERGY STORAGE EXPANSION SECTION INSTALLATION INSTALLATION MANUAL

MODEL: SL3500



Disclaimer and Warning

1. Thank you for choosing our product! Before using this product, please read this manual carefully. It includes important information and instructions for use, troubleshooting solutions, etc. Please keep this manual in a safe place.
2. The product warranty does not cover product failures due to accidental damage, unauthorized repairs, improper storage, and incorrect usage methods.

·Call:1-866 939 8222(US)
+44 20 7570 0328(UK)
+49 693 1090 113(DE)

·Web: www.eco-worthy.com

·E-mail: customer.service@eco-worthy.com

I . Product Introduction

The 3.5KW Stackable Energy Storage Expansion Section is designed to expand the battery capacity and the output power of the inverter controller based on the 3.5KW stackable kit. This manual explains the installation process with an example of expanding to 4 batteries and 2 inverter controllers.

II . Precautions

- The 3.5KW stackable energy storage expansion rack normally consists of 8 packages, including 4 battery packages of 48V 50Ah, 2 3500W inverter/charger packages, 1 base rack package, and 1 expansion rack package. (If you have already purchased the basic kit, the number of packages you receive may not be eight. For the exact number of packages you will receive, please refer to the details page of the purchase link.)

- Please wait patiently for all packages to be delivered, and then check the accessories inside the packages. If any accessories are missing, please contact customer service promptly.

- If there are any issues with the packages or if you have any questions, you can contact customer service, and we will do our best to resolve any issues for you.

III. Packing List

1.Battery Package

Battery Package		
Fig	**Name**	**Qty.**
	48V 50AH LiFePo4 Battery	1
	Red and Black Battery Terminal Covers	1pair
	M8 battery terminal screw	2

2.Inverter Package

Inverter Package		
Fig	**Name**	**Qty.**
	3500W Inverter Charger	1
	M8 Red Battery Cable	2
	M8 Black Battery Cable	2
	M10 to M8 Red Battery Cable	1
	Wifi Module	1
	Parallel Communication Cable	1
	Current Sharing Detection Cable	1
	DC Power Switch	1
	Phillips Hex Head Combination Screw M6*40	4
	Phillips Hex Head Combination Screw M6*55	4
	Flange Nut M6	4
	Phillips Hex Head Combination Screw M8*16	6
	Red and Black Battery Terminal Covers	1 pair

3.Bracket Package

Bracket Package		
Fig	**Name**	**Qty.**
	Non-Brake Caster Wheels	2
	Brake Caster Wheels	2
	Retractable Handle Bracket	1
	Base Handle Frame	1
	Handle Frame	1
	Bracket Top Cover	1
	Bracket Base Cover	1
	Bracket Side Frame	4
	Phillips Hex Head Combination Screw M6*16	19
	Phillips Hex Head Combination Screw M6*25	16
	Phillips Hex Head Bolt M6*140	1
	Hex Socket Cap Screw M5*25	2

4.Expansion Rack Package

Expansion Rack Package		
Fig	**Name**	**Qty.**
	Bracket Top Cover	1
	Bracket Base Cover	1
	Bracket Side Frame	4
	Phillips Hex Head Combination Screw M6*40	4
	Phillips Hex Head Combination Screw M6*25	16
	Flange Nut M6	4
	M8 Red Battery Cable	1
	M8 Black Battery Cable	1

IV. Installation Steps

Step 1:



×19
Phillips Hex Head
Combination Screw M6*16

First, secure the four bottom casters (Note: The casters with brakes should be fixed on the side close to the handle frame). After the casters are installed, secure the handle frame.

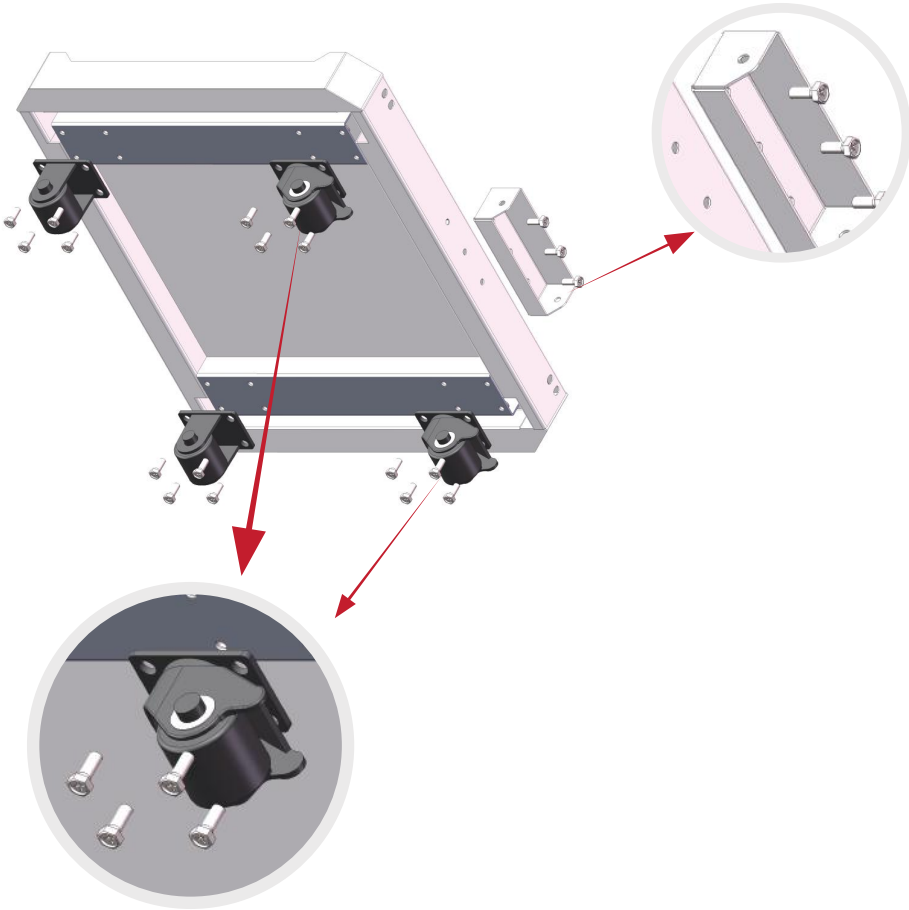

Step 2: Secure the handle



×1
Phillips Hex Head
Bolt M6*140



×2
Hex Socket Cap
Screw M5*25

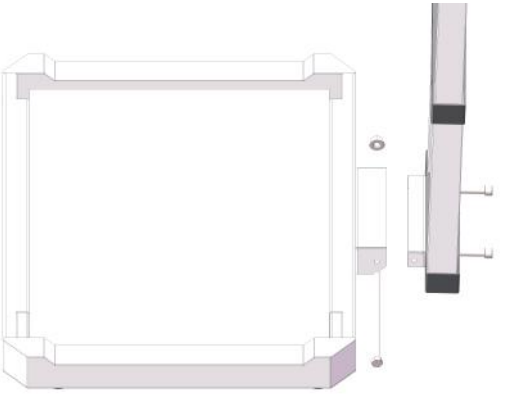

Step 3: Install the two batteries by stacking them onto the rack

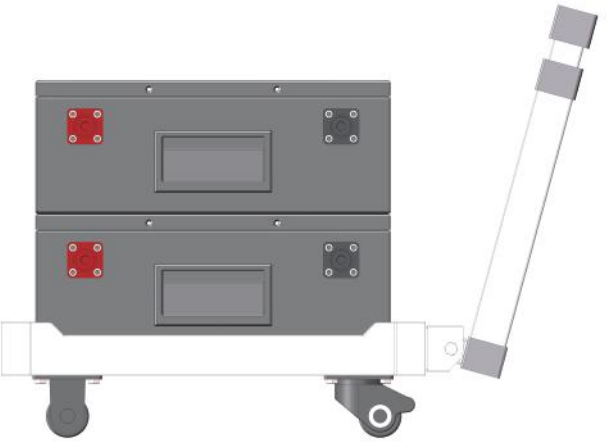

Step 4: Secure the side frame and top cover with screws



×16
Phillips Hex Head Combination
Screw M6*25

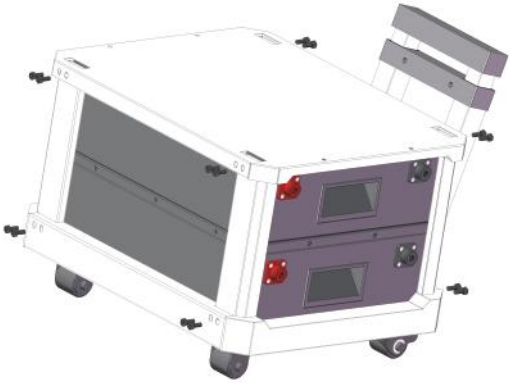

Step 5: Secure the bottom cover of the expansion rack section



×4
Phillips Hex Head
Combination Screw M6*40



×4
Flange Nut M6



Step 6: After stacking another two batteries, install the frame and top cover of the rack

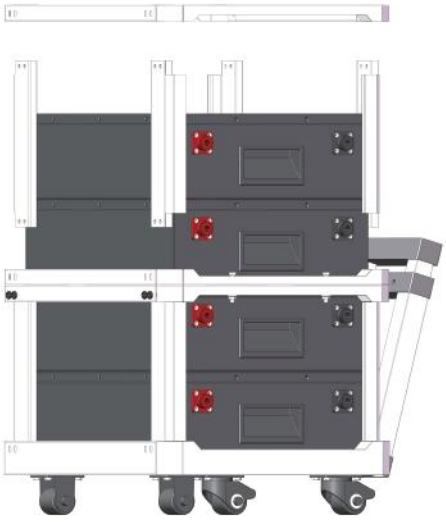

Step 7: Secure the top cover and frame with screws



×16
Phillips Hex Head Combination
Screw M6*25

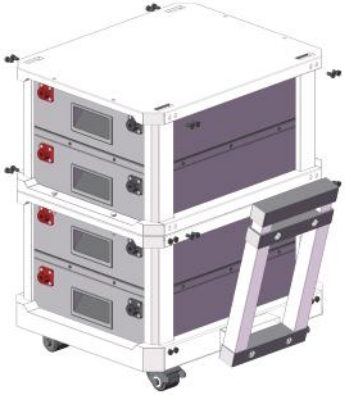

Step 8: Secure two inverters on the top of the rack with the screws provided in the inverter package



×4
Phillips Hex Head
Combination Screw M6*40



×4
Phillips Hex Head
Combination Screw M6*55



×8
Flange Nut M6

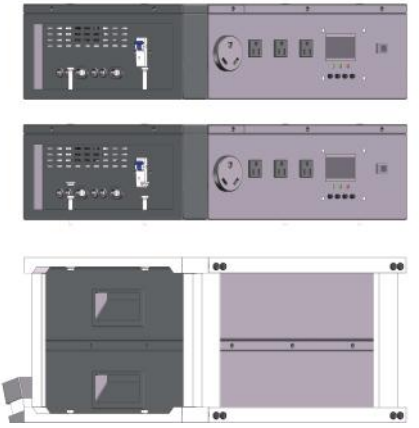

Step 9: Wiring

First, connect the battery cables between the batteries. Connect the red cable to the positive terminal of the battery and the black cable to the negative terminal (i.e., connect the positive terminal of one battery to the positive terminal of another battery, and the negative terminal of one battery to the negative terminal of another battery).

Second, ensure that the current switch is in the off position. Connect the current switch to the positive terminal of the battery and inverter with the red battery cable, and connect the negative terminal of the inverter to the negative terminal of the battery with the black cable (i.e., connect the positive terminal of the battery to the BAT+ of the inverter, and the negative terminal of the battery to the BAT- of the inverter).

Third, connect the BAT+ of one inverter to the BAT+ of another inverter with the red battery cable, and connect the BAT- of one inverter to the BAT- of another inverter with the black battery cable. Finally, turn on the current switch.

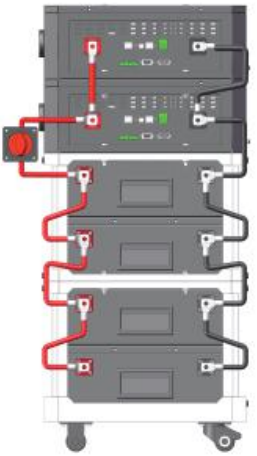

V.Technical Support

1) Customer service email:

E-mail: customer. service@eco-worthy.com

2) Customer service telephone numbers:

Tel(DE): +49 693-1090-113

Tel(US): 1-866-939-8222

Tel(UK): +44 20 7570 0328

Note:
Customer Service Hours:

US: Mon-Fri 8：3AM - 6:00 PM(CST)

UK: Mon-Fri 9 AM - 5 PM(GMT)

DE: Mon-Fri 9 AM - 5 PM(CET)

3) Company address: USA/Germany

Address(US): 10920 W Sam Houston Pkwy N,Suite 700, Houston, TX 77064

Address(DE): ECO-Worthy Europe GmbH Otto-Hahn-Str. 20 61381 Friedrichsdorf - Köppern Germany

4) Official website address:

Web: https://www.eco-worthy.com/

5) Official social media:

Facebook: https://www.facebook.com/ecoworthy.store/

Youtube: @ecoworthy

Tiktok: https://www.tiktok.com/@eco_worthy

ECO-WORTHY

customer.service@
eco-worthy.com

Tel(DE): +49 693-1090-113
Tel(US): 1-866-939-8222
Tel(UK): +44 20 7570 0328

www.eco-worthy.com