ECO-WORTHY

Version: 1.0

3.5KW STACKABLE ENERGY STORAGE BASE KIT INSTALLATION

INSTALLATION MANUAL

MODEL: SL3500



Disclaimer and Warning

1. Thank you for choosing our product! Before using this product, please read this manual carefully. It includes important information and instructions for use, troubleshooting solutions, etc. Please keep this manual in a safe place.
2. The product warranty does not cover product failures due to accidental damage, unauthorized repairs, improper storage, and incorrect usage methods.

·Call:1-866 939 8222(US)
+44 20 7570 0328(UK)
+49 693 1090 113(DE)

·Web: www.eco-worthy.com

·E-mail: customer.service@eco-worthy.com

I . Product Introduction

The 3.5KW stackable energy storage base kit comes with retractable handle brackets that can be adjusted to a suitable height. It features 4 durable wheels, with front wheels equipped with brakes, making it adaptable to various placement scenarios. The sturdy bracket structure can support up to 200KG. The inverter section has a power output of up to 3500W, and the inverter can be paralleled (1 to 6 units, with 2 units recommended). It includes two 48V 50AH LiFePO4 batteries, providing a total energy storage capacity of 5.12KWH.

II . Precautions

- The 3.5KW stackable energy storage base kit is delivered in four packages: one bracket package, one inverter package, and two battery packages.
- Please wait until all four packages are delivered before checking the contents. If any parts are missing, please contact customer service immediately.
- If there are any issues with the packages or if you have any questions, feel free to contact customer service. We are committed to resolving any problems you may encounter.

III. Packing List

1.Battery Package

Battery Package		
Fig	**Name**	**Qty.**
	48V 50AH LiFePo4 Battery	1
	Red and Black Battery Terminal Covers	1pair
	M8 battery terminal screw	2

2.Inverter Package

Inverter Package		
Fig	**Name**	**Qty.**
	3500W Inverter	1
	M8 Red Battery Cable	2
	M8 Black Battery Cable	2
	M10 to M8 Red Battery Cable	1
	Wifi Module	1
	Parallel Communication Cable	1
	Current Sharing Detection Cable	1
	DC Power Switch	1
	Phillips Hex Head Combination Screw M6*40	4
	Phillips Hex Head Combination Screw M6*55	4
	Flange Nut M6	4
	Phillips Hex Head Combination Screw M8*16	6
	Red and Black Battery Terminal Covers	1 pair

3.Bracket Package

Bracket Package		
Fig	**Name**	**Qty.**
	Non-Brake Caster Wheels	2
	Brake Caster Wheels	2
	Retractable Handle Bracket	1
	Base Handle Frame	1
	Handle Frame	1
	Bracket Top Cover	1
	Bracket Base Cover	1
	Bracket Side Frame	4
	Phillips Hex Head Combination Screw M6*16	19
	Phillips Hex Head Combination Screw M6*25	16
	Phillips Hex Head Bolt M6*140	1
	Hex Socket Cap Screw M5*25	2

IV. Installation Steps

Step 1:



×19
Phillips Hex Head
Combination Screw M6*16

First, secure the four bottom casters (Note: The casters with brakes should be fixed on the side close to the handle frame). After the casters are installed, secure the handle frame.

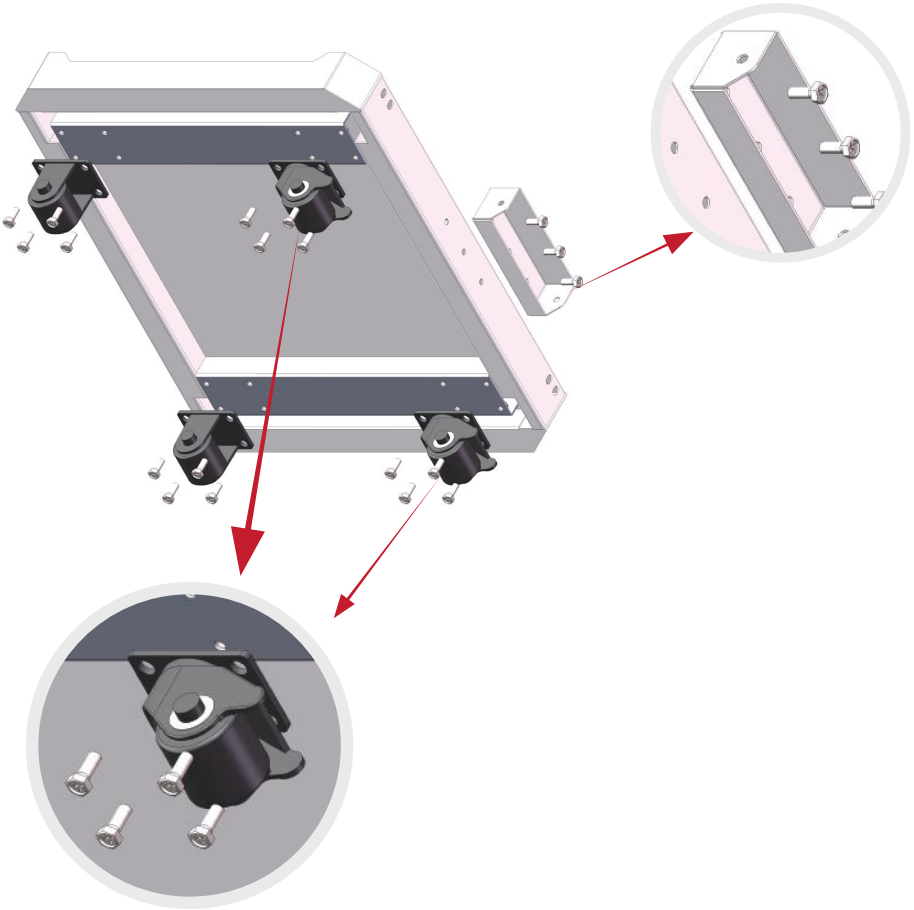

Step 2: Secure the handle



×1
Phillips Hex Head
Bolt M6*140



×2
Hex Socket Cap
Screw M5*25

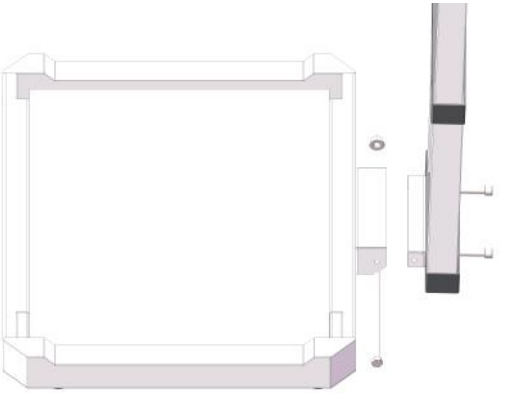

Step 3: Install the two batteries by stacking them onto the rack

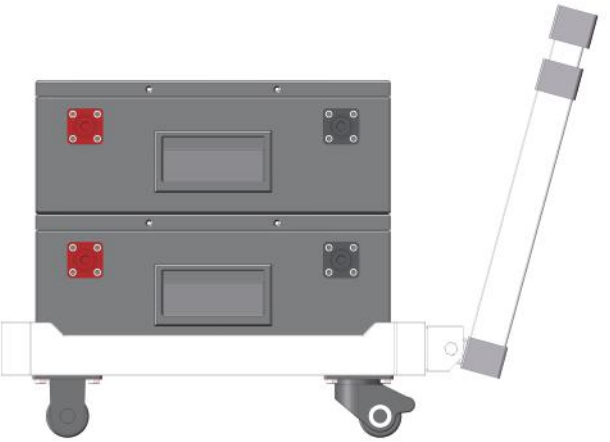

Step 4: Install the four side frames and the top cover of the bracket



Step 5: Secure the side frames and top cover with screws



×16
Phillips Hex Head Combination
Screw M6*25

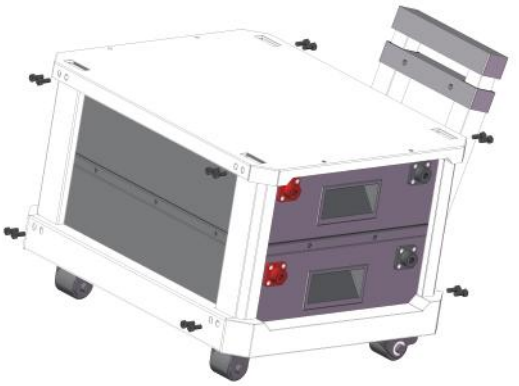

Step 6: After stacking another two batteries, install the frame and top cover of the rack



×4
Phillips Hex Head
Combination Screw M6*40



×4
Flange Nut M6



Step 7: Wiring

First, connect the battery cables between the two batteries. Connect the red wire to BAT+ and the black wire to BAT-, ensuring the positive terminal of the battery is connected to the positive terminal, and the negative terminal to the negative terminal.

Next, ensure the power switch is turned off. Connect the power switch to the positive terminal between the battery and the inverter. Then, connect the red wire from the battery to the BAT+ terminal on the inverter, and the black wire from the battery to the BAT- terminal on the inverter (i.e., the positive terminal of the battery connects to the positive terminal of the inverter, and the negative terminal of the battery connects to the negative terminal of the inverter).

Finally, turn on the power switch.

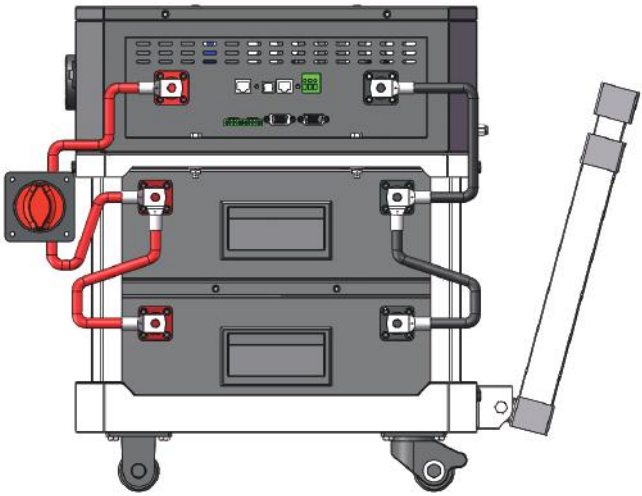

V.Technical Support

1) Customer service email:

E-mail: customer. service@eco-worthy.com

2) Customer service telephone numbers:

Tel(DE): +49 693-1090-113

Tel(US): 1-866-939-8222

Tel(UK): +44 20 7570 0328

Note:
Customer Service Hours:

US: Mon-Fri 8：3AM - 6:00 PM(CST)

UK: Mon-Fri 9 AM - 5 PM(GMT)

DE: Mon-Fri 9 AM - 5 PM(CET)

3) Company address: USA/Germany

Address(US): 10920 W Sam Houston Pkwy N,Suite 700, Houston, TX 77064

Address(DE): ECO-Worthy Europe GmbH Otto-Hahn-Str. 20 61381 Friedrichsdorf - Köppern Germany

4) Official website address:

Web: https://www.eco-worthy.com/

5) Official social media:

Facebook: https://www.facebook.com/ecoworthy.store/

Youtube: @ecoworthy

Tiktok: https://www.tiktok.com/@eco_worthy

ECO-WORTHY

customer.service@
eco-worthy.com

Tel(DE): +49 693-1090-113
Tel(US): 1-866-939-8222
Tel(UK): +44 20 7570 0328

www.eco-worthy.com