EG4® 12K & 24K HYBRID MINI-SPLIT AC/DC R32

USER MANUAL

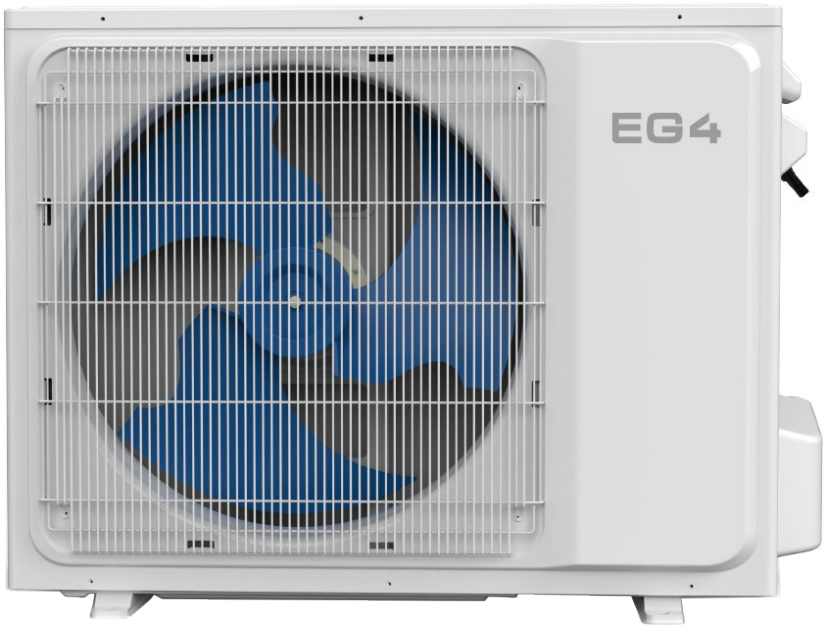

©2026 EG4® ELECTRONICS, LLC. ALL RIGHTS RESERVED.
VERSION 1.0.2 | INFORMATION SUBJECT TO CHANGE WITHOUT NOTICE.
OUDOOR MODEL #: DWA4-ACDC1-12R2 AND DWB3-ACDC-24R2
INDOOR MODEL #: DGA3-ACDC1-12KR2 AND DGA2-ACDC-24KR2

TABLE OF CONTENTS

1. TECHNICAL SPECIFICATIONS 1
2. ABBREVIATIONS 3
3. SAFETY 4
   3.1 SAFETY INSTRUCTIONS 4
   3.2 IMPORTANT SAFETY NOTIFICATIONS 4
4. SÉCURITÉ 7
   4.1 INSTRUCTIONS DE SÉCURITÉ 7
   4.2 INFORMATIONS DE SÉCURITÉ IMPORTANTES 7
5. INTRODUCTION 10
   5.1 MINI-SPLIT FEATURES 10
   5.2 UNIT OPERATION OVERVIEW 11
   5.3 LINE SET SPECIFICATIONS 12
   5.4 PACKING LIST 13
6. INSTALLATION TOOLS 13
7. SELECT INSTALLATION LOCATION 14
   7.1 INDOOR UNIT 14
   7.2 OUTDOOR UNIT 15
8. INDOOR UNIT INSTALLATION 16
   8.1 WALL BRACKET INSTALLATION 16
   8.2 DRILL A WALL HOLE 17
   8.3 CONNECT THE SIGNAL CABLE 18
   8.4 PREPARE THE PIPING 19
   8.5 MOUNT THE INDOOR UNIT 21
9. OUTDOOR UNIT INSTALLATION 23
   9.1 INSTALL DRAIN JOINT 23
   9.2 SECURE THE OUTDOOR UNIT 23
   9.3 CONNECT SIGNAL AND POWER CABLES 24
   9.4 WIRING DIAGRAMS 26
   9.5 INSTALL REFRIGERANT LINE SET 27
   9.6 RELEASE REFRIGERANT INTO THE SYSTEM 28
   9.7 GAS LEAK TESTS 29
10. PHOTOVOLTAIC MODULE INSTALLATION 30
   10.1 OVERVIEW 30
   10.2 SOLAR ARRAY WIRING 31
11. ELECTRICAL CHECKS 32
12. TEST RUN 33
   12.1 BEFORE TEST RUN 33
   12.2 INSTRUCTIONS 33
13. OPERATING INSTRUCTIONS 34
   13.1 HYBRID AND AC OPERATION 34
   13.2 OPERATING TEMPERATURE RANGES 35
   13.3 OPTIMAL OPERATION 35
   13.4 AIRFLOW DIRECTION 36
   13.5 INDOOR UNIT DISPLAY 37
   13.6 REMOTE CONTROL OPERATION 38
   13.7 MANUAL OPERATION 40
14. PHONE APP 41
   14.1 INSTALLATION 41
   14.2 USING THE APP 45
15. CARE AND MAINTENANCE 47
   15.1 CLEANING THE INDOOR UNIT 47

15.2 PREPARATION FOR EXTENDED NON-OPERATION 49
15.3 PRE-SEASON INSPECTION 49
16. TROUBLESHOOTING 50
16.1 COMMON ISSUES AND CAUSES 50
16.2 PROBLEMS, CAUSES, AND SOLUTIONS 51
16.3 INDOOR UNIT LED ERROR CODES 52

1. TECHNICAL SPECIFICATIONS

ELECTRICAL (AC)	12K SYSTEM	24K SYSTEM
RATED VOLTAGE	115 VAC	208 – 240 VAC
RATED CURRENT	8.3A	9 – 9.5A
RATED INPUT POWER	190W – 1100W	190W – 2250W
FREQUENCY	60 Hz	
MINIMUM CIRCUIT AMPACITY	19.05A	16.33A
MAXIMUM BREAKER SIZE	20A	
MAXIMUM STARTING CURRENT	4A	6A
ELECTRICAL (DC)		
RATED VOLTAGE	90 – 380 VDC	150 – 380 VDC
RATED CURRENT	2.4 – 9.1A	5.4 – 13.67A
MAXIMUM PV VOLTAGE (VOC)	≤380 VOC	
MAXIMUM PV AMPERAGE (ISC)	≤12A	≤20A
RATED PV WATTAGE	1100W	2200W
RATED COOLING		
NOMINAL CAPACITY	12,000 BTU/h	24,000 BTU/h
OPERATING RANGE	3,000 – 12,500 BTU/h	6,100 – 25,200 BTU/h
RATED POWER	950W	2050W
RATED CURRENT	8.35A	9.5A
EER2 (BTU/W)	12.6	11.7
SEER (W/W)	20.8	20.5
SEER2 (W/W)	22.5	21
RATED HEATING		
NOMINAL CAPACITY	12,000 BTU/h	24,000 BTU/h
OPERATING RANGE	3,000 – 13,000 BTU/h	6,000 – 26,000 BTU/h
RATED POWER	980W	1900W
RATED CURRENT	8.6A	8.35A
COP (BTU/W)	12.25	12.6
HSPF2-5 (W/W)	/	7.9
HSPF2-4 (W/W)	9.7	10
SYSTEM DATA		
DESIGN PRESSURE (PSIG)	<651 PSI	
REFRIGERANT	R32/27.52 oz. (0.81 L)	R32/40.57 oz. (1.20 L)
PRE-CHARGED REFRIGERANT LINE	16.4 ft. (5 m)	
CHARGE REQUIRED PER ADDITIONAL FT*	0.16 oz. (4.73 ml)	0.2 oz. (5.91 ml)
LIQUID VALVE DIAMETER	1/4 in. (6.35 mm)	
GAS VALVE DIAMETER	3/8 in. (9.52 mm)	1/2 in. (12.7 mm)
MAX REFRIGERANT PIPE LENGTH	49.2 ft. (15 m)	82 ft. (25 m)
MAX ELEVATION BETWEEN UNITS	26.2 ft. (8 m)	32.8 ft. (10 m)

*When using pre-vacuumed line set extensions. Pre-charged line set extensions do not require additional freon.

COMPRESSOR SPECIFICATIONS		
TYPE	Rotary	2 × Rotary
MAX. INPUT POWER	834W	2105W
RATED LOAD AMPERAGE (RLA)	5.7A	6.72A
INDOOR UNIT DATA	**DGA3-ACDC1-12KR2**	**DGA2-ACDC-24KR2**
OUTPUT POWER	15W	45W
RATED LOAD AMPERAGE (RLA)	0.4A	0.48A
SPEED (TURBO/5/4/3/2/1)	1250/1100/1000/900/800/750 r/min	1350/1250/1100/1050/950/900 r/min
AIR FLOW (TURBO/5/4/3/2/1)	340/320/300/280/260/250 CFM	700/625/560/526/462/430 CFM
SOUND PRESSURE (TURBO/5/4/3/2/1)	41.5/37.5/34.5/32/31/29 dB(A)	50/48.5/45.5/43.5/41/39 dB(A)
MOISTURE REMOVAL	2.65 pt/hr. (1.3 L/hr.)	4.5 pt/hr. (2.1 L/hr.)
UNIT DIMENSIONS (W×D×H)	33.1 x 8.1 x 11.6 in. (840 x 205 x 295 mm)	42.5 x 9.3 x 13.0 in. (1080 x 236 x 330 mm)
PACKAGING DIMENSIONS (W×D×H)	36.2 x 11.4 x 14.2 in. (920 x 290 x 361 mm)	44.9 x 11.8 x 14.3 in. (1140 x 300 x 363 mm)
UNIT/PACKAGED WEIGHT	20.9/26.0 lbs. (9.5/11.8 kg)	33.1/38.6 lbs. (15.0/17.5 kg)
OPERATING TEMPERATURE (COOLING)	61 – 90°F (16 – 32°C)	
OPERATING TEMPERATURE (HEATING)	32 – 90°F (0 – 32°C)	
OUTDOOR UNIT DATA	**DWA4-ACDC1-12R2**	**DWB3-ACDC-24R2**
OUTPUT POWER	35W	75W
RATED LOAD AMPERAGE (RLA)	0.42A	0.81A
SPEED (HI/MED/LO)	800 r/min	850 r/min
AIR FLOW (HI/MED/LO)	1,060 CFM	1,940 CFM
SOUND PRESSURE (HI/MED/LO)	52 dB(A)	58 dB(A)
UNIT DIMENSIONS (W×D×H)	31.6 x 12.7 x 22.2 in. (802 x 323 x 564 mm)	35.4 x 13.3 x 27.6 in. (900 x 338 x 701 mm)
PACKAGING DIMENSIONS (W×D×H)	35.8 x 15.9 x 24.5 in. (909 x 404 x 622 mm)	39.6 x 16.5 x 29.7 in. (1006 x 419 x 754 mm)
UNIT/PACKAGED WEIGHT	70.6/81.6 lbs. (32.0/37.0 kg)	102.5/114.6 lbs. (46.5/52.0 kg)
OPERATING TEMPERATURE (COOLING)	32 – 131°F (0 – 55°C)	
OPERATING TEMPERATURE (HEATING)	5 – 86°F (-15 – 30°C)	
ACCESSORIES		
CONTROL	Remote	
SIGNAL CABLE	18 AWG (4 Stranded)	
INSTALLATION LINESET LENGTH	16.4 ft. (5 m)	
WARRANTY		
LIMITED WARRANTY	5-Year limited warranty	

2. ABBREVIATIONS

- AWG – American Wire Gauge
- A – Amps
- Ah – Amp hour(s)
- AC – Alternating Current
- AFCI – Arc-Fault Circuit Interrupter
- AHJ – Authority Having Jurisdiction
- kAIC – kilo-Amp Interrupting Capability
- ANSI – American National Standards Institute
- BAT – Battery
- BMS – Battery Management System
- COM – Communication
- CT – Current Transformer
- DC – Direct Current
- DIP – Dual In-line Package
- DOD – Depth of Discharge
- EG – Equipment Ground
- EGS – Equipment Grounding System
- EMC – Electromagnetic Compatibility
- EPS – Emergency Power System
- ESS – Energy Storage System
- E-Stop – Emergency Stop
- FCC – Federal Communication Commission
- GE – Grounding Electrode
- GEC – Grounding Electrode Conductor
- GFCI – Ground Fault Circuit Interrupter
- GFDI – Ground Fault Detector/Interrupter
- Imp – Maximum Power Point Current
- IEEE – Institute of Electrical and Electronic Engineers
- IP – Ingress Protection
- Isc – Short-Circuit Current
- In-lbs. – Inch Pounds
- kW – Kilowatt
- kWh – Kilowatt-hour
- LCD – Liquid Crystal Display
- LFP – Lithium Iron Phosphate
- L1 – Line 1
- L2 – Line 2
- mm – Millimeters
- MPPT – Maximum Power Point Tracking
- mV – Millivolt
- N – Neutral
- NEC – National Electric Code
- NEMA – National Electrical Manufacturers Association
- NFPA – National Fire Prevention Association
- Nm – Newton Meters
- NOCT – Normal Operating Cell Temperature
- PC – Personal Computer
- PCB – Printed Circuit Board
- PE – Protective Earth
- PPE – Personal Protective Equipment
- PV – Photovoltaic
- RSD – Rapid Shut Down
- SCC – Standards Council of Canada
- SOC – State of Charge
- STC – Standard Testing Conditions
- UL – Underwriters Laboratories
- UPS – Uninterrupted Power Supply
- V – Volts
- VOC – Open-Circuit Voltage
- VMP – Voltage Maximum Power

3. SAFETY

3.1 SAFETY INSTRUCTIONS

International safety regulations have been strictly observed in the design and testing of the hybrid window unit. Before beginning any work, carefully read all safety instructions, and always observe them when working on or with the window unit. The installation must comply with all applicable national and local standards and regulations.

Incorrect installation may cause:

- Injury or death to the installer, operator or third party
- Damage to the inverter or other attached equipment

3.2 IMPORTANT SAFETY NOTIFICATIONS

DANGER! Hazardous Voltage Circuits!

There are various safety concerns that must be carefully observed before, during, and after the installation, as well as during future operation and maintenance. The following are important safety notifications for the installer and all end-users of this product under normal operating conditions.

1. This equipment requires the handling and installation of high-pressure gases and hazardous levels of AC and DC voltages. Ensure that all the wiring is compliant with local regulations.
2. All electrical work must be performed by a licensed technician in accordance with local regulations and the instructions provided in this guide.
3. Only authorized service technicians should repair or perform maintenance on this unit.
4. If the unit operates abnormally (emits strange noises or a burning smell), immediately turn off the unit and disconnect the power to avoid electric shock, fire, and/or injury. Call the distributor for further assistance.
5. When moving or relocating the air conditioner, consult experienced service technicians for disconnection and reinstallation of the unit.
6. Personal Protection Equipment (PPE) must be used while installing this equipment. The manufacturer and any reseller of this equipment assume no responsibility for any failure to properly protect personnel from injury.
7. Failure to follow all applicable safety standards will result in a void of warranty.
8. The unit contains fluorinated gases. For specifics on the type of gas used, please refer to the label on the outdoor unit.
9. Never supply power to the unit unless all wiring and tubing are completely connected and re-checked.
10. If the air conditioner is used together with burners or other heating devices, thoroughly ventilate the room to avoid oxygen deficiency.
11. This unit must be properly grounded and plugged into a GFCI-rated outlet.
12. For all electrical work, fuse the specified cables. Connect cables tightly and clamp them securely to prevent external forces from damaging the terminal. Improper electrical connections can overheat, potentially causing a fire and/or electrical shock.
13. The unit and any solar modules must be properly grounded in accordance with local electrical and building codes.
14. Compatible MC4 connectors must be used.
15. Use only the provided parts and accessories for installation. Using any non-standard parts could result in water leakage, electrical shock, fire, or cause the unit to fail.
16. Only install the unit in a location that can support the weight of the unit. Failure to do so could result in the unit falling and injuring personnel or damaging property.

17. In certain functional environments (such as kitchens and server rooms etc.), the use of specially designed air-conditioning units is highly recommended.
18. If the communication cable supplied is damaged, it must be replaced by the manufacturer, its service agent, or a similarly qualified person to avoid a hazard.
19. The unit must be stored in a room free from continuously operating ignition sources (e.g., open flames, operating gas appliances, or operating electric heaters).
20. The unit must be stored in a manner that prevents mechanical damage.
21. Keep ventilation openings clear of obstruction.
22. Dispose of the air conditioner in accordance with Federal and Local regulations. Flammable refrigerants require special disposal procedures.
23. Never store or ship the air conditioner upside down or sideways to avoid damage to the compressor.

DO NOT: Install the unit within 1 meter of any combustible materials.

DO NOT: Share the electrical circuit with other appliances. You must use an independent power supply. An improper or insufficient power supply could cause fire or electrical shock.

DO NOT: Allow any substances or gases to enter the unit when connecting the refrigerant piping. The presence of other gases or substances will lower the unit's capacity and may cause abnormally high pressure during the operation cycle. This could cause an explosion and/or injury.

DO NOT: Allow children to play with the air conditioner. Children should always be supervised around the unit.

DO NOT: Insert your fingers, rods, or other objects into the air inlet or outlet. The fan within the unit may be rotating at high speeds, which could cause injury.

DO NOT: Use flammable sprays such as hair spray, lacquer, or paint near the unit. These could cause fire and/or an explosion.

DO NOT: Install or operate the unit in a room where it could be exposed to excessive amounts of water (*such as a bathroom or laundry room*). Too much exposure to water can cause electrical components to short-circuit.

DO NOT: Expose your skin or body directly to the cool air coming from the unit for a prolonged period.

DO NOT: Operate the air conditioner with wet hands. This could cause electrical shock.

DO NOT: Turn on the power until the installation is complete.

WARNING!

Cancer and Reproductive Harm – See www.P65Warnings.ca.gov for more details.

WARNING:

When using R32 refrigerant:

- When flammable refrigerant is used, the appliance needs to be stored in a well-ventilated area where the room size corresponds to the room area as specified for operation.
- For R32 refrigerant models:
  - Appliances shall be installed, operated, and stored in a room with a floor area larger than 43 sq. ft. (4 m^2).
  - Appliances shall not be installed in an unventilated space if the space is smaller than 43 sq. ft. (4 m^2).
  - **Minimum room size requirements:**
    >12000 BTU/h & <18000 BTU/h: 280 sq. ft. (26 m^2)
  - Reusable mechanical connectors and flared pipes are not allowed indoors. (EN Standard Requirement)
  - Mechanical connectors used indoors shall have a rate of not more than 3 g/year at 25% of the maximum allowable pressure. When mechanical connectors are reused indoors, sealing parts shall be renewed. When flared joints are reused indoors, the flare part shall be re-fabrication. (UL Standard Requirement)
  - When mechanical connectors are reused indoors, sealing parts shall be renewed. When flared joints are reused indoors, the flare part shall be re-fabricated.
  - Mechanical connectors used indoors shall comply with ISO 14903.

NOTE:

This unit contains fluorinated greenhouse gases.

- For specific information on the type of gas and the amount, refer to the relevant label on the unit itself.
- Service, maintenance, and repair of this unit must be performed by a certified technician.
- Product un-installation and recycling must be performed by a certified technician.
- For equipment that contains fluorinated gases in quantities of 5 tons of CO_2 equivalent or more, but less than 50 tons of CO_2 equivalent, and has a leak-detection system installed, it must be checked for leaks at least every 24 months.
- It is recommended to keep a record of all leak checks throughout the unit's lifetime.

DISCLAIMER
EG4 reserves the right to make changes to the material herein at any time without notice.
Please refer to www.eg4electronics.com for the most updated version of our manuals/spec sheets.

4. SÉCURITÉ

4.1 INSTRUCTIONS DE SÉCURITÉ

Les réglementations internationales de sécurité ont été rigoureusement respectées lors de la conception et des tests du mini-split. Avant de commencer tout travail, lisez attentivement toutes les instructions de sécurité et respectez-les toujours lors de l'intervention sur le mini-split. L'installation doit respecter toutes les normes et réglementations locales ou nationales en vigueur.

Une installation incorrecte peut entraîner :

- Des blessures graves ou mortelles à l'installateur, à l'utilisateur ou à un tiers
- Des dommages au mini-split ou à tout autre équipement connecté

4.2 INFORMATIONS DE SÉCURITÉ IMPORTANTES

DANGER

DANGER: CIRCUITS À HAUTE TENSION!

Il existe divers problèmes de sécurité qui doivent être soigneusement observés avant, pendant et après l'installation, ainsi que lors de l'utilisation et de la maintenance futures. Ce qui suit sont des notifications de sécurité importantes pour l'installateur et tout utilisateur final de ce produit dans des conditions de fonctionnement normales.

1. Cet équipement nécessite la manipulation et l'installation de gaz à haute pression et de tensions alternatives et continues dangereuses. Assurez-vous que tout le câblage est conforme à la réglementation locale.
2. Tous les travaux électriques doivent être réalisés par un technicien agréé, conformément aux réglementations locales et aux instructions de ce guide.
3. Seuls des techniciens autorisés doivent réparer ou effectuer l'entretien de cette unité.
4. Si l'appareil fonctionne de manière anormale (bruits inhabituels ou odeur de brûlé), éteignez-le immédiatement et coupez l'alimentation pour éviter tout risque d'électrocution, d'incendie ou de blessure. Contactez le distributeur pour obtenir de l'aide.
5. En cas de déplacement ou de réinstallation du climatiseur, faites appel à un technicien qualifié pour le démontage et la remise en service.
6. Des équipements de protection individuelle (EPI) doivent être utilisés lors de l'installation. Le fabricant et tout revendeur déclinent toute responsabilité en cas de blessure résultant d'une protection insuffisante du personnel.
7. Le non-respect des normes de sécurité applicables entraînera l'annulation de la garantie.
8. L'unité contient des gaz fluorés. Pour connaître le type de gaz utilisé, consultez l'étiquette sur l'unité extérieure.
9. Ne branchez jamais l'alimentation tant que tout le câblage et la tuyauterie ne sont pas complètement connectés et vérifiés.
10. Si le climatiseur est utilisé en même temps que des brûleurs ou autres dispositifs de chauffage, assurez une ventilation suffisante pour éviter un manque d'oxygène.
11. Cette unité doit être correctement mise à la terre et branchée à une prise avec protection différentielle (GFCI).
12. Pour tous les travaux électriques, utilisez les fusibles appropriés. Serrez bien les câbles et fixez-les solidement pour éviter que des forces extérieures n'endommagent les bornes. Des connexions mal réalisées peuvent surchauffer et provoquer un incendie ou une électrocution.
13. L'unité et les modules solaires doivent être correctement mis à la terre conformément aux codes locaux d'électricité et du bâtiment.
14. Des connecteurs MC4 compatibles doivent être utilisés.

15. Utilisez uniquement les pièces et accessoires fournis pour l'installation. L'utilisation de pièces non standard peut entraîner des fuites d'eau, des électrocutions, des incendies ou une défaillance de l'unité.
16. Installez l'unité uniquement dans un emplacement capable de supporter son poids. Le non-respect de cette consigne peut entraîner la chute de l'unité, des blessures ou des dommages matériels.
17. Dans certains environnements fonctionnels (comme les cuisines, les salles serveurs, etc.), l'utilisation d'unités de climatisation spécialement conçues est fortement recommandée.
18. Si le câble de communication fourni est endommagé, il doit être remplacé par le fabricant, son agent de service ou une personne qualifiée de même niveau afin d'éviter tout danger.
19. L'appareil doit être stocké dans une pièce sans sources d'inflammation fonctionnant en permanence (par exemple : flammes nues, appareil à gaz en fonctionnement ou radiateur électrique en fonctionnement).
20. L'appareil doit être stocké de manière à éviter tout dommage mécanique.
21. Maintenir les ouvertures de ventilation dégagées.
22. Éliminer le climatiseur conformément aux réglementations fédérales et locales. Les réfrigérants inflammables nécessitent des procédures d'élimination spécifiques.
23. Ne stockez ni n'expédiez jamais le climatiseur à l'envers ou sur le côté pour éviter d'endommager le compresseur.

NE PAS : Installer l'unité à moins de 1 mètre de tout matériau combustible.
NE PAS : partager le circuit électrique avec d'autres appareils. Une source d'alimentation indépendante doit être utilisée. Une alimentation incorrecte ou insuffisante peut provoquer un incendie ou une électrocution.
NE PAS : Laisser entrer des substances ou des gaz dans l'unité lors du raccordement de la tuyauterie de réfrigérant. La présence de gaz ou de substances étrangers réduit les performances de l'unité et peut entraîner une pression anormalement élevée pendant le fonctionnement, ce qui pourrait causer une explosion et/ou des blessures.
NE PAS : Laisser les enfants jouer avec le climatiseur. Les enfants doivent toujours être surveillés en présence de l'appareil.
NE PAS : Insérer les doigts, des tiges ou d'autres objets dans les entrées ou sorties d'air. Le ventilateur à l'intérieur de l'unité peut tourner à grande vitesse et provoquer des blessures.
NE PAS : Utiliser de sprays inflammables (comme la laque, la peinture ou les aérosols) à proximité de l'unité. Cela pourrait provoquer un incendie et/ou une explosion.
NE PAS : Installer ou faire fonctionner l'unité dans une pièce exposée à de grandes quantités d'eau (comme une salle de bain ou une buanderie). L'exposition à l'eau peut entraîner un court-circuit des composants électriques.
NE PAS : Exposer directement la peau ou le corps à l'air froid de l'unité pendant une période prolongée.
NE PAS : Faire fonctionner le climatiseur avec les mains mouillées. Cela pourrait entraîner une électrocution.
NE PAS : Mettre l'alimentation sous tension tant que l'installation n'est pas entièrement terminée.

AVERTISSEMENT !

Cancer et effets nocifs sur la reproduction – Voir www.P65Warnings.ca.gov pour plus de détails.

AVERTISSEMENT !

UTILISATION DU RÉFRIGÉRANT R32 :

- Lorsqu'un réfrigérant inflammable est utilisé, l'appareil doit être stocké dans un endroit bien ventilé, dont la superficie correspond à celle spécifiée pour son fonctionnement.
- Pour les modèles utilisant du réfrigérant R32 :
  - Les appareils doivent être installés, utilisés et stockés dans une pièce d'une superficie supérieure à 4 m² (43 pi²).
  - Les appareils ne doivent pas être installés dans un espace non ventilé si celui-ci fait moins de 4 m² (43 pi²).
  - Exigences minimales de surface de la pièce :
    > 12000 BTU/h et < 18000 BTU/h : 26 m² (280 pi²)
    Les raccords mécaniques réutilisables et les tuyaux évasés ne sont pas autorisés à l'intérieur.
    (Exigence selon la norme EN)
  - Les raccords mécaniques utilisés à l'intérieur doivent avoir un taux de fuite inférieur ou égal à 3 g/an à 25 % de la pression maximale admissible. Si les raccords mécaniques sont réutilisés à l'intérieur, les éléments d'étanchéité doivent être remplacés. Si des joints évasés sont réutilisés à l'intérieur, la partie évasée doit être refaite.
    (Exigence selon la norme UL)
  - Les raccords mécaniques réutilisés à l'intérieur doivent comporter des joints d'étanchéité neufs. Les joints évasés doivent être refabriqués.
  - Les raccords mécaniques utilisés à l'intérieur doivent être conformes à la norme ISO 14903.

REMARQUE:

Cette unité contient des gaz à effet de serre fluorés.

- Pour des informations précises sur le type et la quantité de gaz, veuillez consulter l'étiquette correspondante apposée sur l'unité.
- L'entretien, la maintenance et la réparation de cette unité doivent être effectués par un technicien certifié.
- La désinstallation et le recyclage du produit doivent être réalisés par un technicien certifié.
- Pour les équipements contenant des gaz à effet de serre fluorés en quantité équivalente à 5 tonnes de CO_2 ou plus, mais inférieure à 50 tonnes de CO_2, et équipés d'un système de détection de fuites, une vérification des fuites doit être effectuée au moins tous les 24 mois.
- Il est recommandé de conserver un registre de toutes les vérifications de fuites tout au long de la durée de vie de l'unité.

AVIS DE NON-RESPONSABILITÉ

EG4 se réserve le droit de modifier le contenu de ce document à tout moment et sans préavis. Veuillez consulter le site www.eg4electronics.com pour la version la plus récente de nos manuels et fiches techniques.

5. INTRODUCTION

5.1 MINI-SPLIT FEATURES

EG4 mini-split air conditioners consist of both an indoor and outdoor unit. Each unit can cool or heat, depending on the need. The system comes pre-charged with refrigerant, allowing for DIY installation.

Hybrid models can operate on AC power or DC power from a dedicated solar array. While they can run entirely on solar energy, connecting to solar power isn't mandatory. It's recommended to connect the unit to AC power to support days with low solar energy or for nighttime use. The unit can automatically switch to AC power when needed to ensure continuous operation. Installation is similar to a standard mini-split air conditioner, with the addition of a solar input connected directly to the DC inputs.

Each unit comes with a remote control and can also be controlled by a smartphone via a third-party application.

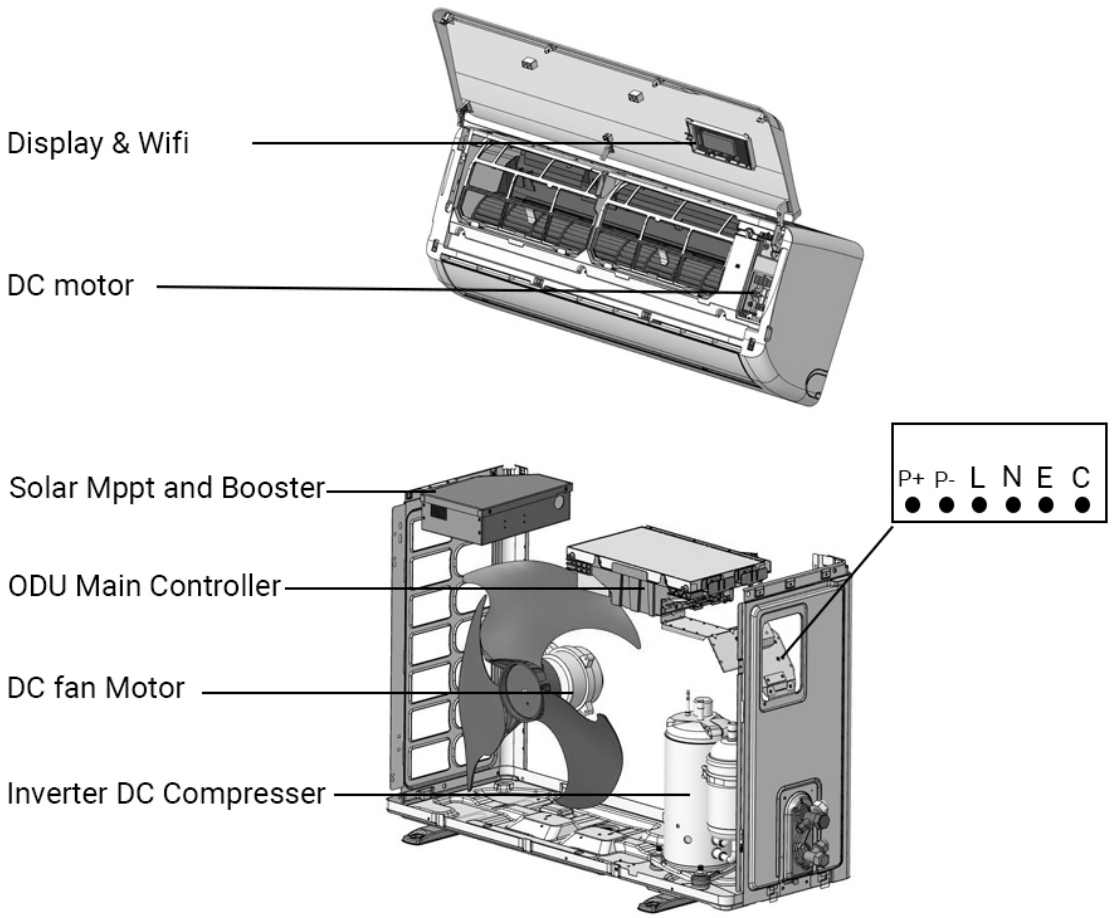

Hybrid AC-DC Inverter Mini-Split Structure

5.2 UNIT OPERATION OVERVIEW

COOLING MODE

- As the room temperature approaches the set point, the compressor slows to a very low speed.
- When the room temperature difference is less than 1.8°F (1°C) below the set point, the system switches to fan mode.
- The system switches to heating mode if the temperature difference falls below 5.4°F (3°C) of the set point.

HEATING MODE

- When the room temperature nears the set point, the compressor slows significantly.
- If the room temperature becomes within the set point to 3.6°F (2°C) above the set point, the system operates in fan mode.
- The system transitions into cooling mode if the temperature difference exceeds 3.6°F (2°C) above the set point.

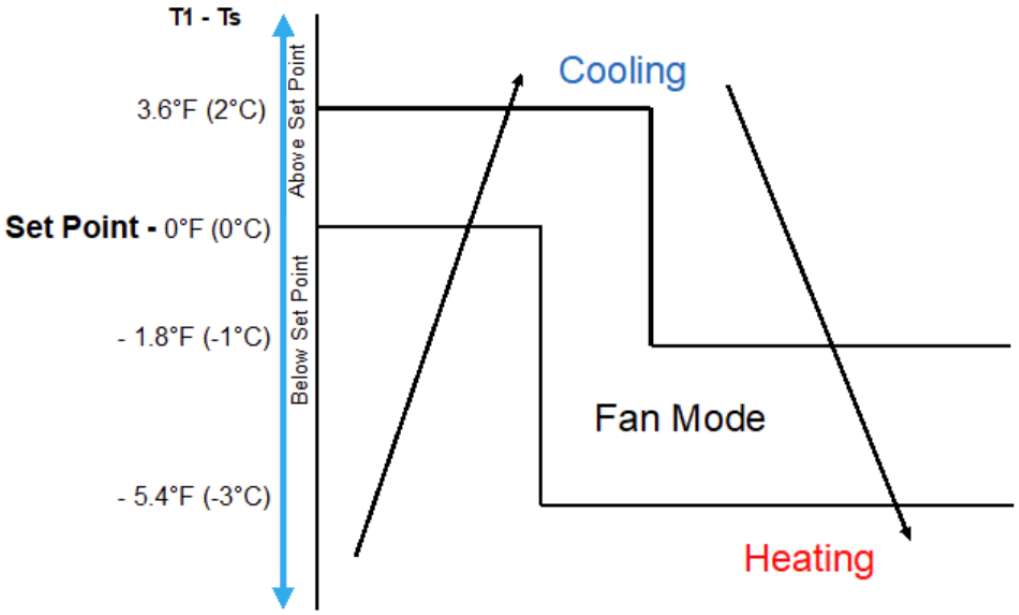

KEY DESIGN NOTE

The indoor fan remains active in auto mode, with only the outdoor compressor unit shutting down. This is due to the system's design, which allows it to operate dynamically across cooling, heating, and fan modes, depending on the temperature conditions.

SUMMARY

The unit is designed to function in fan mode once the target temperature is reached, with a tolerance of ±3.6°F (±2°C) in heating mode and ±5.4°F (±3°C) in cooling mode.

5.3 LINE SET SPECIFICATIONS

Review the information below for specific details about line set (refrigerant line) specifications before starting the installation.

IMPORTANT:

The table below displays the maximum length and height that refrigerant lines can be installed for each system, based on its respective capacity. To achieve some of these lengths, line set extension kits must be used (not included, see below). Any attempt to increase the line set length beyond what is specified in the table below could result in reduced heating/cooling performance, system damage or failure, and WILL VOID THE WARRANTY.

ITEM	12K	24K
Maximum line set length	49 ft. (15 m)	66 ft. (25 m)
Maximum height difference between the indoor and the outdoor unit	26 ft. (8 m)	33 ft. (10 m)

5.4 PACKING LIST

SUPPLIED COMPONENTS		
Number	**Quantity**	**Description**
1	1	Indoor Unit
2	1	Indoor Unit Mounting Plate (ships attached to indoor unit)
3	1	Remote Control
4	2	AAA Battery
5	1	Signal Cable (indoor unit to outdoor unit)
6	1	Outdoor Unit
7	1	Weather Protection Wrapping Tape
8	1	Drainpipe 5 ft. length x .59 in. diameter (1.5m x 15 mm)
9	1	Wall Sleeve
10	1	Sealant Putty
11	1	Manual
12	1	MC4 connector tool
13	1	MC4 Style Connector Set (outdoor unit)
14	1	16.4 ft. (5 m) Line Set (refrigerant lines) with Quick Connect fittings*
15	3	Screws
16	4	Retaining pins
17	3	Sleeve Anchor

The images shown are for representative purposes only.

*The Quick Connect fitting may be packaged separately or preinstalled on the outdoor unit.

6. INSTALLATION TOOLS

The following list of tools may be needed to install the indoor and outdoor units properly.

- Drill with drill bit set
- 2 ½ in. or 3 ½ in. hole saw
- Phillips head screwdriver
- Adjustable wrenches
- Level
- Painter's tape
- Marker or pencil
- MC4 crimp tool (*if using MC4 connectors provided with parts kit*)

7. SELECT INSTALLATION LOCATION

7.1 INDOOR UNIT

Before installing each indoor unit, choose a suitable location.

Proper installation locations meet the following criteria:

- Proper airflow around the unit (*see clearances listed below*)
- Adequate drainage
- Wall that supports the full weight of the unit
- A wall that limits vibration while the unit is running
- At least 3 $^{5}/_{16}$ ft. (1m) from any other electrical devices (*e.g., TV, radio, computer*)
- Allow the associated tubing to fit through the wall without interfering with other wiring or piping already in place

DO NOT install the unit in the following areas:

- Near a heat source, steam, or flammable gas
- Near flammable items like curtains or clothing
- Near objects that block air flow
- Near doorways or areas where outdoor air may blow on the unit
- In direct sunlight exposure

The indoor unit requires the following clearances once mounted in place on the wall.

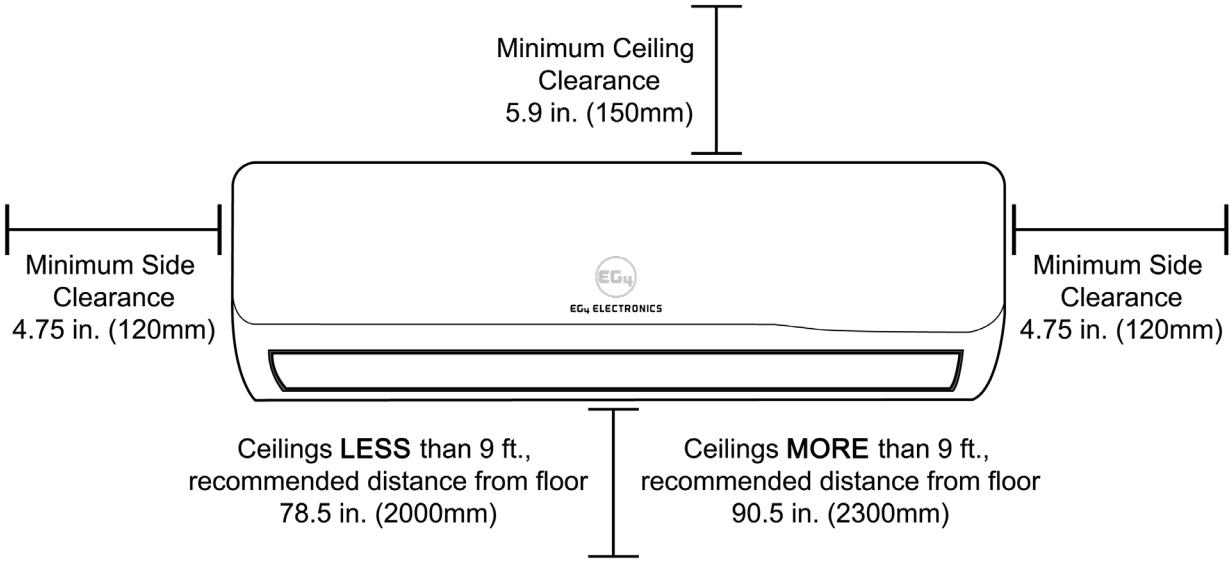

NOTE:
When selecting a location for the indoor unit, verify that there is ample room for a wall hole (see Section 8.2) to accommodate the condensation hose, refrigerant line set, and signal wire. The hole is positioned on the right side of the bracket.

7.2 OUTDOOR UNIT

Before installing the outdoor unit, a suitable location must be chosen. The following standards will determine the location.

Proper installation locations meet the following standards:

- Meets all spatial requirements shown in the “Clearance Requirements” image on the right.
- Good air circulation and proper ventilation.
- Stable and sturdy location that bears the weight of the unit and reduces vibration.
- Noise from the unit will not disturb others.
- Protected from prolonged exposure to direct sunlight or rain.
- In areas where snowfall is expected, elevate the unit above the base pad to prevent coil damage caused by ice buildup.
- Mount the unit high enough to be above the average accumulated area snowfall. The minimum height must be at least 18 inches above ground.

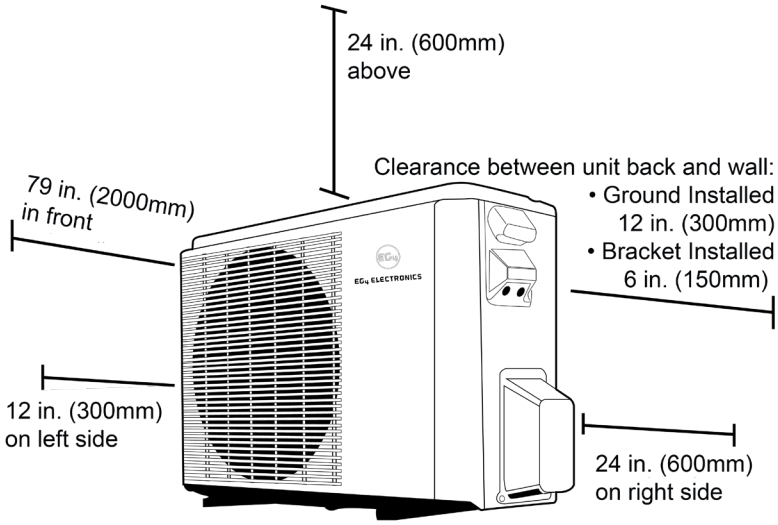

Clearance Requirements

DO NOT INSTALL

- Near an obstacle that will block air inlets and outlets
- Near public streets, crowded areas, or other locations where noise from the unit will disturb others
- Near animals or plants that will be harmed by hot air discharge
- Near any source of combustible gas or in a location that is exposed to large amounts of dust
- In a location exposed to excessive amounts of salty air

IMPORTANT: SPECIAL CONSIDERATIONS FOR EXTREME WEATHER

If the unit is exposed to strong winds, position it so the air outlet fan faces at a 90° angle to the wind direction. If necessary, build a barrier in front of the unit to protect it from very strong winds. Verify that the wind barrier does not obstruct essential airflow.

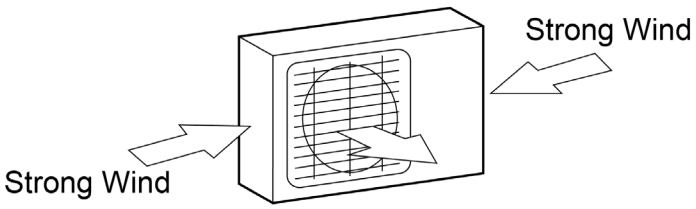

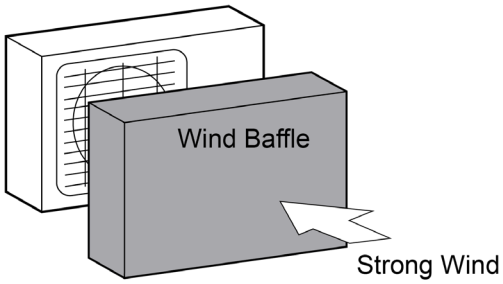

8. INDOOR UNIT INSTALLATION

8.1 WALL BRACKET INSTALLATION

The mounting bracket is used to attach the indoor unit to the wall.

NOTE:

- Verify the bracket is installed on a secure surface that is sufficiently dense to support the unit and prevent unwanted noise and vibration.
- If the mounting surface is made of sheetrock, install the mounting screws into studs or use adequate sheetrock anchors (*not supplied*) that can support the weight of the unit.
- If the mounting surface is made of brick, concrete, or similar material, drill a 13/64 inch (5 mm) pilot holes and place the provided sleeve anchors in the holes. Secure the mounting plate to the wall by tightening the screws into the bracket and sleeve anchors

INSTALLATION STEPS:

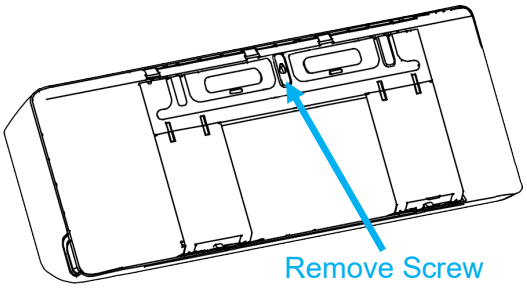

1. The mounting bracket arrives attached to the back of the indoor unit. Remove the bracket using a Phillips-head screwdriver before installation.
2. Place the mounting plate against the wall in a location that meets the standards as defined in section 7.
3. Drill a hole for the center mounting screw that:
   a. has a stud or a wall anchor that can support the weight of the unit
   b. corresponds to the screw holes in the mounting plate
4. Secure the indoor mounting plate to the wall using the center mounting hole.
5. Use a level to ensure the mounting plate is level.

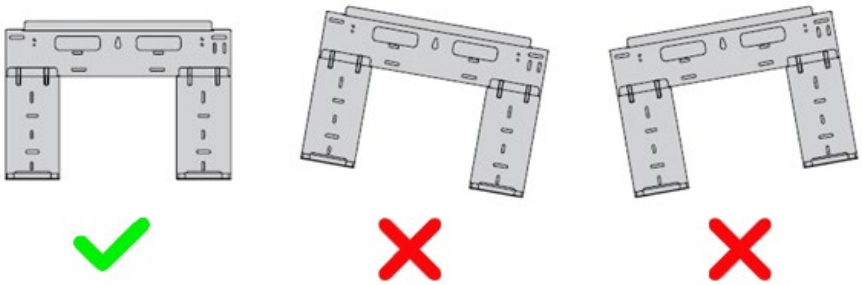

6. Mark the remaining installation screw holes. Drill pilot holes and insert the screws. If sheetrock anchors are needed, swivel the bracket side to side to install each anchor. Then realign the bracket with the anchor and install the screws.

8.2 DRILL A WALL HOLE

A hole must be drilled in the wall for the refrigerant line set, the condensation hose, and the signal cable that will connect the indoor and outdoor units.

NOTE:

A cardboard template for marking the wall hole placement is included in the box. The measurement on the template corresponds to the measurements listed in the image below.

INSTALLATION STEPS:

1. Measure 4 $^{3}/_{4}$ in. (121 mm) horizontally from the middle of the right-side leg and mark this location with a line. (see image below)
2. Measure 1 $^{3}/_{4}$ in. (45 mm) vertically from the bottom of the right-side leg of the bracket and mark this location with a line. (*see image below*)
3. Mark the location where the lines from steps 1 & 2 intersect. This mark is the center of the hole that will be drilled in the next section. Please refer to the image below for reference.

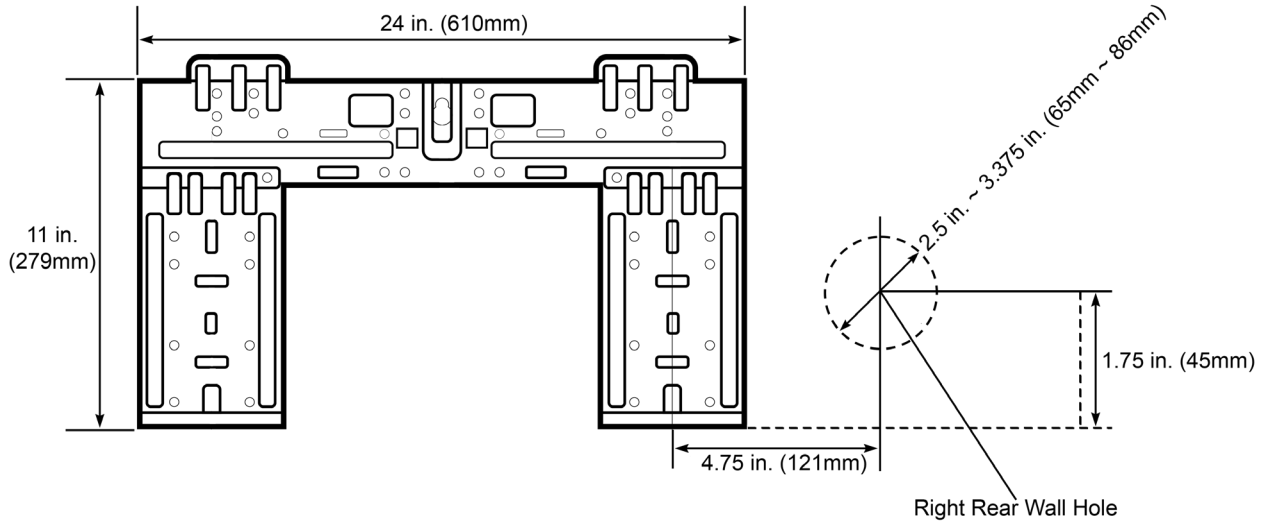

NOTE:

The preferred installation method is to drill a hole behind the unit for the piping and wiring. If a hole cannot be made behind the indoor unit, run the piping and wiring through the optional knockout panel on the side of the unit, as shown in the illustration below.

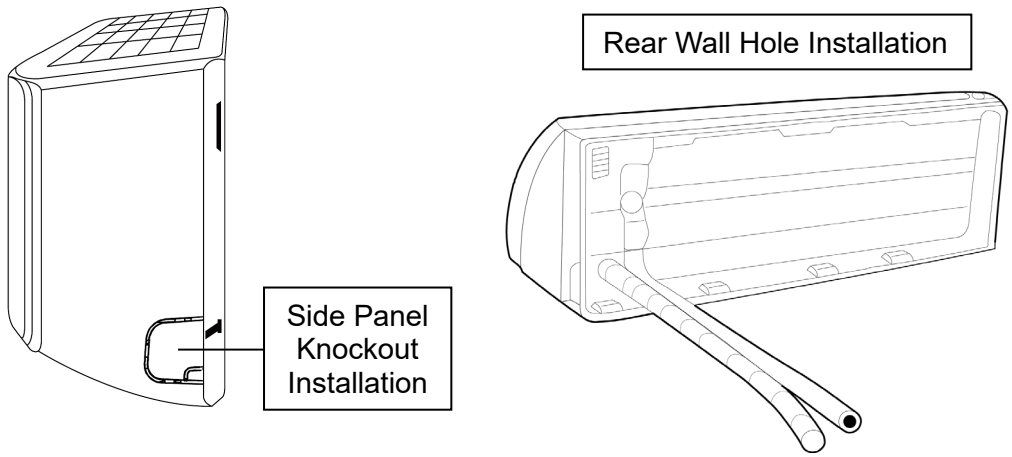

4. Using the appropriately sized hole saw and a drill, make a hole in the marked location. Be sure to angle the hole saw at a downward angle to aid with condensation pipe drainage, as shown below.

CAUTION:
When drilling the wall hole, be sure to avoid wires, plumbing, and other sensitive components

INDOOR UNIT	HOLE SAW SIZE
12K	2 1/2 in. (65 mm)
24K	3 3/8 in. (86 mm)

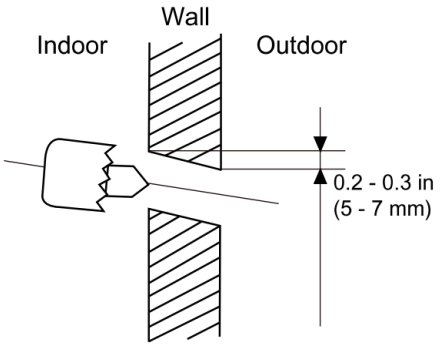

5. Insert the specified wall sleeve into the wall opening. This sleeve protects the wiring and pipes that will be installed through the hole in a later step.

8.3 CONNECT THE SIGNAL CABLE

To prepare the indoor unit for electrical connectivity, install one end of the signal cable to the electrical connections of the indoor unit.

NOTE:
When preparing the indoor unit for installation, ignore the 2-pronged female connector that might be present in the unit. This connector serves no function and should remain unused. The connector can vary in shape, size, and color.

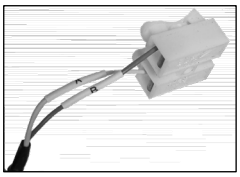

INSTALLATION STEPS:

1. Open the front panel of the unit and locate the wiring box cover on the right side of the unit.
2. Remove the wire box cover using a screwdriver to reveal the terminal blocks.
3. Unscrew the cable clamp below the terminal block and place it to the side.

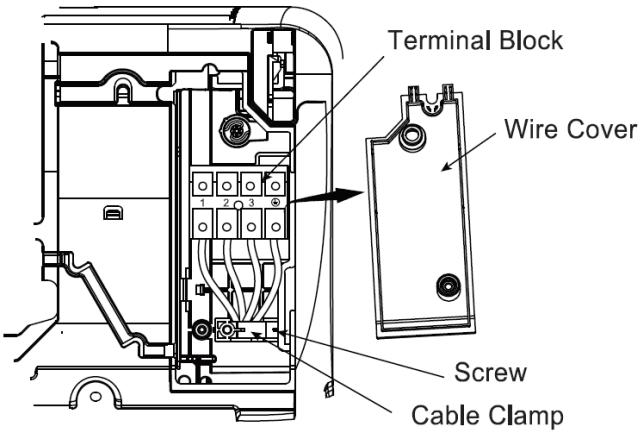

4. While facing the back of the unit, feed the signal wire through the metal bracket to the terminal block area on the front side.

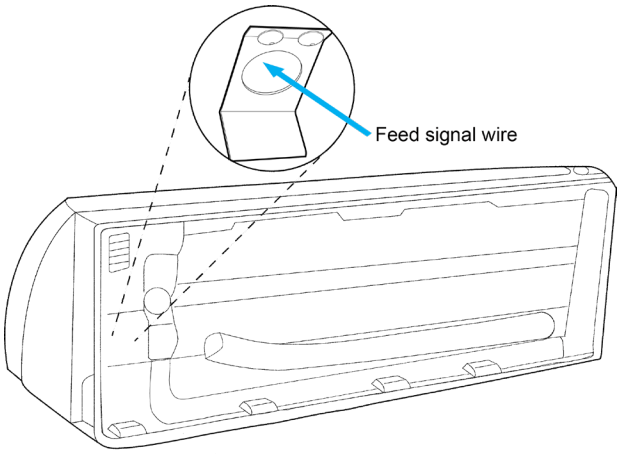

5. While in front of the unit, match the wire colors with the labels on the terminal block. Connect each wire's spade connector to its corresponding terminal, securing each screw tightly.

TERMINAL NUMBER	WIRE COLOR
1	Brown
2	Blue
3	Black
G	Yellow/Green

6. After checking to make sure every connection is secure, use the cable clamp to fasten the signal cable to the unit. Screw the cable clamp tightly.

7. Replace the wire cover on the front of the unit.

8.4 PREPARE THE PIPING

To prepare the piping for installation, straighten the refrigerant lines and move the condensation drain hose to the same side as the refrigerant lines. This will help all lines pass through the wall together as a single bundle.

1. Safely set the indoor unit on a secure table/platform to expose the back of the unit. This will allow access to the condensation drain hose and refrigerant lines.

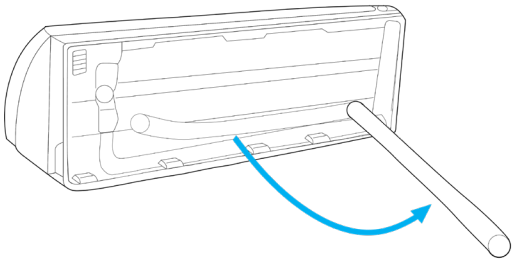

2. Pull the condensation drain hose away from the back of the unit. This hose will be made of plastic and is located on the right side when standing at the back of the unit.

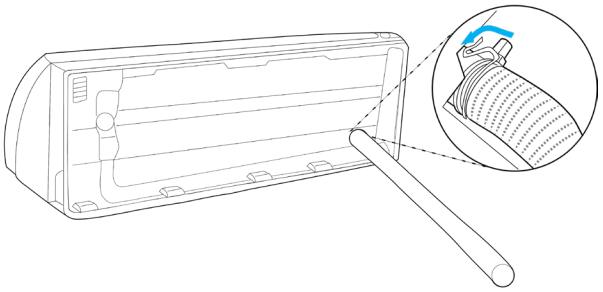

3. Locate the swivel clip where the condensation drain hose attaches to the unit. Rotate the swivel clip counterclockwise to unlock the clip. Then remove the condensation drain hose by gently rotating it side to side in a twisting motion and pulling outwards.

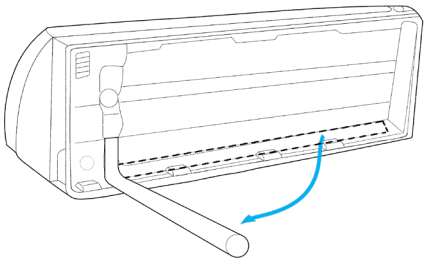

CAUTION:
Be extremely careful not to dent or damage the refrigerant lines while bending them away from the unit.

4. Locate the black rubber plug on the side of the unit near the refrigerant lines. Carefully remove the plug by slowly twisting it side to side while pulling outward. The plug fits snug, so be careful not to tear or damage it.

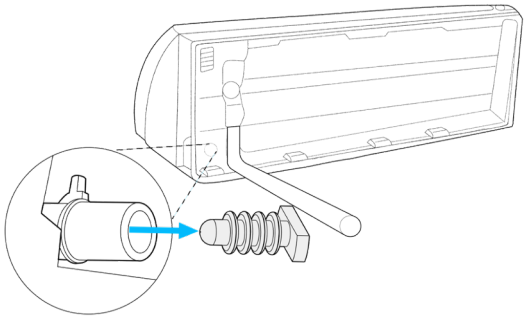

5. Connect the condensation drain hose to the drain fitting where the rubber drain plug was removed. Twist the swivel clip into place to secure the hose. Gently pull the hose to ensure it is securely connected and leak-free.

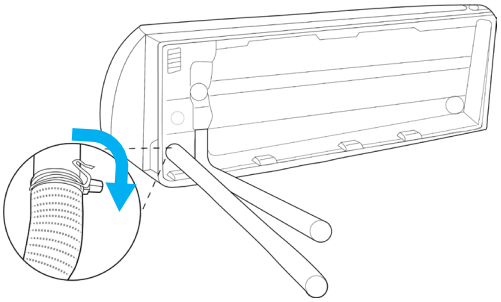

6. Insert the plug into the drain fitting where the condensation hose was removed from on the right side of the unit. Make sure the plug is inserted all the way past the ribs to create a tight, leak-free seal.

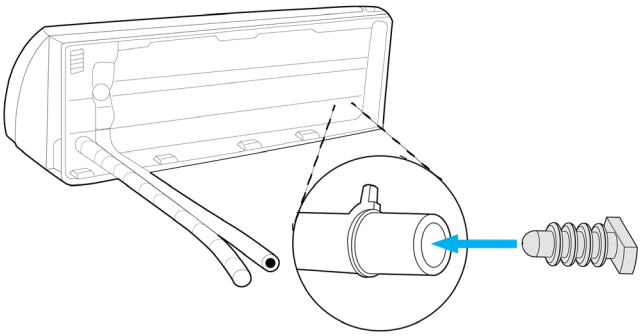

7. Locate the 5 ft. (1.5 m) condensation drain hose that comes with the unit. Attach it to the drain hose already connected to the indoor unit. Make sure the hose connects securely. Wrap the joint with waterproof tape to prevent the hoses from coming apart.

8. It is recommended to wrap the condensation drain hose, which will be housed indoors, with foam pipe insulation to prevent excess condensation buildup.

9. Bundle the refrigerant line set and the condensation drain hose together using vinyl tape. Be sure to attach the drain hose to the underside of the refrigerant pipes.

10. Wrap the refrigerant pipes and drain hose tightly together with insulation tape.

11. Bundle the pipes and signal wiring together as one bundle before passing them through the wall. Painter's tape can be used here as it can be easily removed after the indoor unit is installed, leaving no residue.

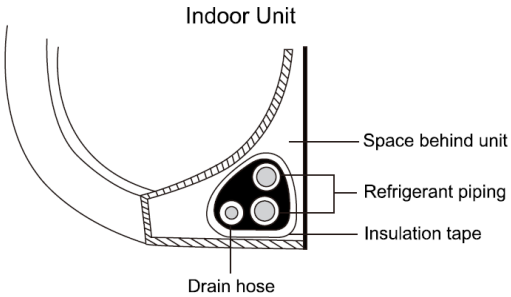

CAUTION:
Verify that the condensation drain hose is positioned at the bottom of the bundle. Placing the drain hose at the top can cause the drain pan to overflow, potentially leading to fire or water damage.

8.5 MOUNT THE INDOOR UNIT

Follow the steps below to install the indoor unit on the wall bracket:

1. Double-check that the ends of the refrigerant line set are sealed with the factory-installed caps to prevent dirt or foreign material from contaminating the pipes.
2. Slowly pass the wrapped bundle of refrigerant, condensation hose, and wiring through the hole in the wall.
3. Hook the top of the indoor unit on the upper hook of the mounting plate.

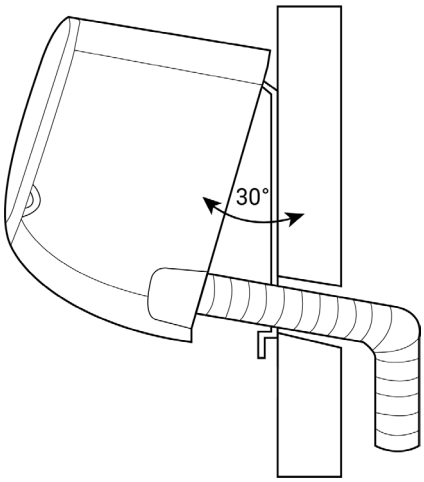

4. Apply even pressure and press down on the bottom half of the unit. Keep pushing until the unit snaps into place onto the hooks along the bottom of the mounting plate.
5. The communication wire and the refrigerant line set will be connected to the outdoor unit after the outdoor unit is securely mounted in place.

Helpful Tip:

- Use the team-lift technique when lifting the indoor unit to guide the hose and wiring through the hole drilled in the wall.
- Keep in mind that the hooks on the mounting plate are smaller than the holes on the back of the unit. To line up and pass through the pipe and wiring bundle, the unit can be adjusted left or right by about 1 $^{1}/_{4}$ in. – 1 $^{15}/_{16}$ in. (30 mm – 50 mm), depending on the model.

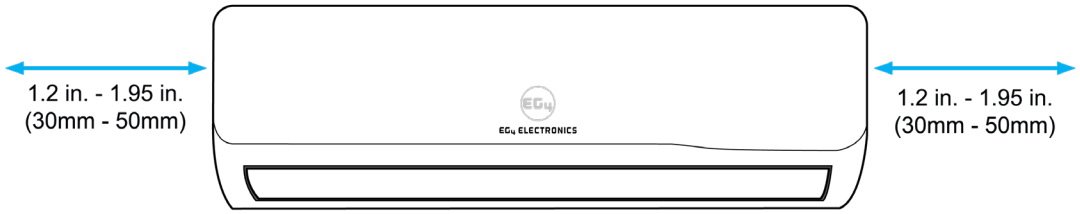

Move left or right

CAUTION:

Verify that the condensation drain hose is properly configured to ensure proper drainage, as shown in the images below. Improper drainage can cause water damage to a home and its property.

Proper drainage	Upward turns anywhere in the length of the drain hose will cause water traps.	Kinks in the drain hose will cause water traps.	Do not place containers at the end of the drain hose that could prevent proper drainage.
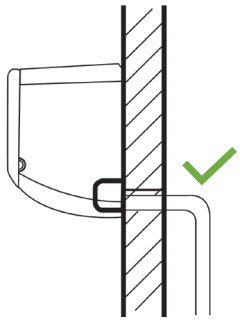	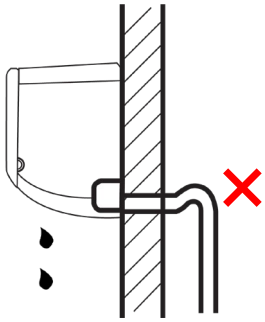	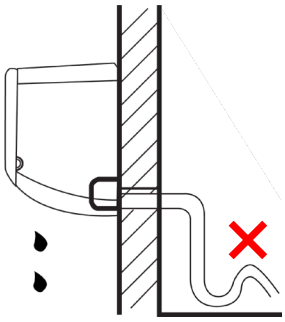	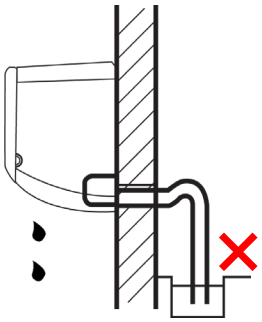

9. OUTDOOR UNIT INSTALLATION

9.1 INSTALL DRAIN JOINT

Follow these steps to install the drain joint. Running the unit in heat mode will require a drain joint. Before bolting the outdoor unit in place, install the drain joint at the bottom of the unit.

1. Insert the drain joint into the hole in the base pan of the unit.
2. Facing the front of the unit, rotate the drain joint 90° until it locks in place.
3. If needed, connect a drain hose extension (not included) to the drain joint to redirect water from draining under the unit during heating mode.

There are two different types of drain joints depending on the type of outdoor unit.

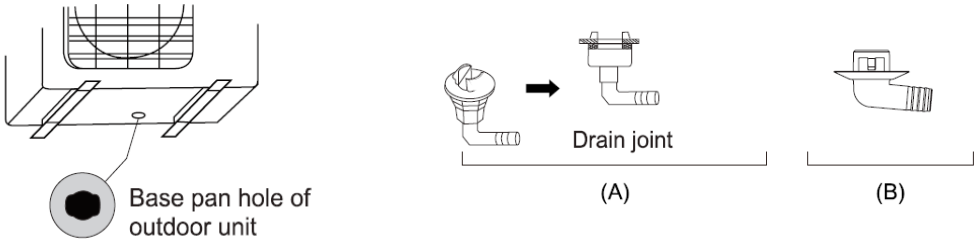

CAUTION:

In cold climates, verify the drain hose is properly sloped to facilitate quick water drainage. If water drains slowly or becomes trapped, it can freeze in the hose, causing flooding in the unit.

9.2 SECURE THE OUTDOOR UNIT

The outdoor unit can be mounted on the ground or attached to a wall-mounted bracket. The distances between the mounting feet are provided in the chart below to help prepare the outdoor unit for installation.

12K Unit	A	21 $^{3}/_{16}$ in. (539 mm)
	B	14 in. (355 mm)
24K Unit	A	24 $^{1}/_{4}$ in. (616 mm)
	B	14 in. (355 mm)

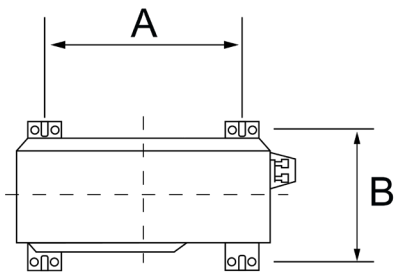

Unit Mounting Dimensions

IMPORTANT:

The outdoor unit must be securely fastened before attaching the refrigerant line set and any necessary electrical cables. Securing the unit helps protect the line set and cables from over-flexing and potential damage caused by unexpected movement of the unit.

GROUND MOUNTING

WARNING:
When drilling into concrete, always wear eye protection.

To install the unit on the ground or on a concrete mounting platform, complete the following:

1. Mark the positions for four expansion bolts based on the dimensions in section 9.2.
2. Pre-drill holes for expansion bolts.
3. Clean concrete dust away from holes.
4. Temporarily place a nut on the end of each expansion bolt to protect the threads from damage.
5. Hammer expansion bolts into the pre-drilled holes.
6. Remove the nuts from the expansion bolts and set the outdoor unit on the bolts.
7. Put a washer on each expansion bolt, then replace the nuts.
8. Using a wrench, tighten each nut until it is snug.

WALL MOUNTING

CAUTION:
Before installing a wall-mounted unit, verify that the wall is made of solid brick, concrete, or a similarly strong material. The wall must be able to support at least FOUR times the weight of the unit.

To install the outdoor unit on a wall-mounted bracket, complete the following:

1. Mark the position of bracket holes based on the dimensions in section 9.2.
2. Pre-drill the holes for the expansion bolts.
3. Clean dust and debris away from holes.
4. Place a washer and nut on the end of each expansion bolt.
5. Thread expansion bolts through holes in mounting brackets, put the mounting brackets in position, and hammer the expansion bolts into the wall.
6. Ensure that the mounting brackets are level.
7. Carefully lift the unit and place its mounting feet on the brackets.
8. Using a wrench, bolt the unit firmly into the brackets.

NOTE:
If available, install rubber gaskets under the wall-mounted outdoor unit to reduce vibration and noise.

9.3 CONNECT SIGNAL AND POWER CABLES

The outside unit's terminal block is protected by an electrical wiring cover on the side of the unit. A detailed wiring diagram is printed on the inside of the wiring cover and is included in this guide.

CAUTION:
Before performing electrical work, read the following regulations:

- All wiring must meet local and national electrical codes and be installed by a licensed electrician.
- All electrical connections must be made following the Electrical Connection Diagram located on the panels of the indoor and outdoor units.
- If there are any safety issues with the supply of power from the main panel, stop working immediately. Contact a licensed electrician for assistance with resolving the issue.
- Power supply voltage should be within 90-100% of the rated voltage. An insufficient power supply can cause malfunctions, electrical shocks, or fires.

- All circuits, including any switches, should have a capacity 1.25 times the maximum unit current (*amps*).
- The qualified technician must use an approved circuit breaker or switch that disconnects all poles and has a contact separation of at least 1/8 in. (3mm).
- Make sure to ground the air conditioner properly.
- Every wire must be firmly connected. Loose wiring can cause the terminal to overheat, resulting in a malfunction and potentially leading to a fire.
- All wiring must be properly arranged to ensure that the electrical wiring cover can close properly on the outside unit. If the control board cover is not closed properly, it can lead to corrosion, which can cause the connection points on the terminal to overheat, potentially resulting in a fire and/or electric shock.
- **DO NOT** connect any other appliances to the same circuit.
- **DO NOT** let wires touch or rest against refrigerant tubing, the compressor, or any moving parts within the unit.

INSTALLATION STEPS:

1. Remove the electrical wiring cover from the unit by loosening the 3 retaining screws.
2. Remove the appropriate caps on the conduit panel to support conduit tube installation.
3. Temporarily mount conduit tubes (*not included*) on the conduit panel.
4. Properly connect both the power supply and low voltage lines to the corresponding terminals on the terminal block. (*see image below*)
5. Ground the unit in accordance with local codes.
6. Be sure to size each wire length several inches longer than required to create ample working room inside the wiring cover.
7. Use lock nuts to secure the conduit tubes.
8. Replace the wire cover and reinstall the 3 screws.

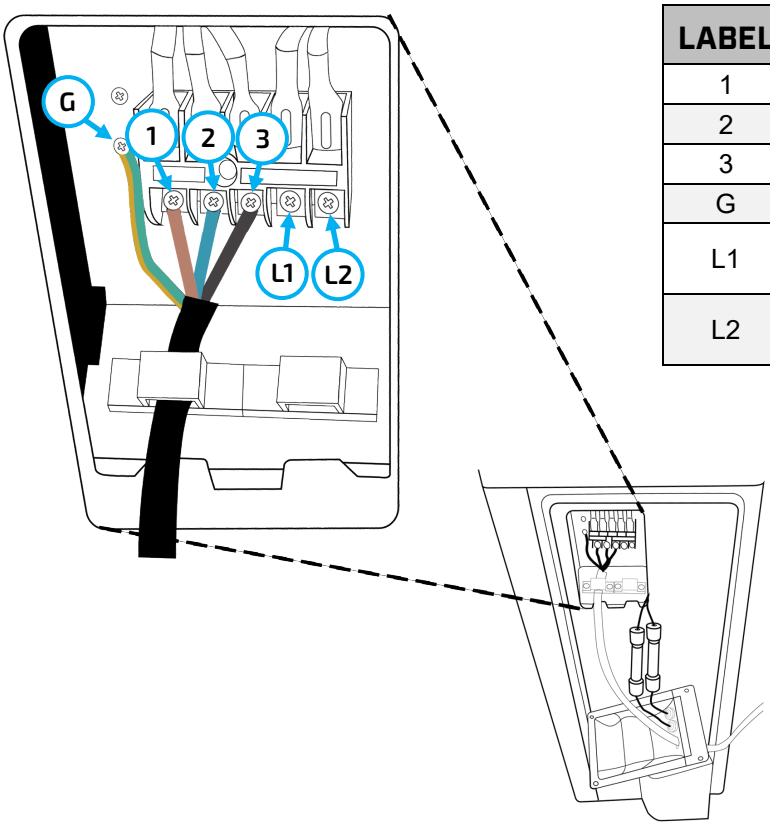

LABEL	WIRE SOURCE & COLOR
1	Signal Cable - Brown
2	Signal Cable - Blue
3	Signal Cable - Black
G	Signal Cable - Yellow/Green
L1	12k AC Line 1 - Black 24K AC Line 1 - Black
L2	12k Neutral - White 24K AC Line 2 - Red

9.4 WIRING DIAGRAMS

12K WIRING DIAGRAM (115VAC)

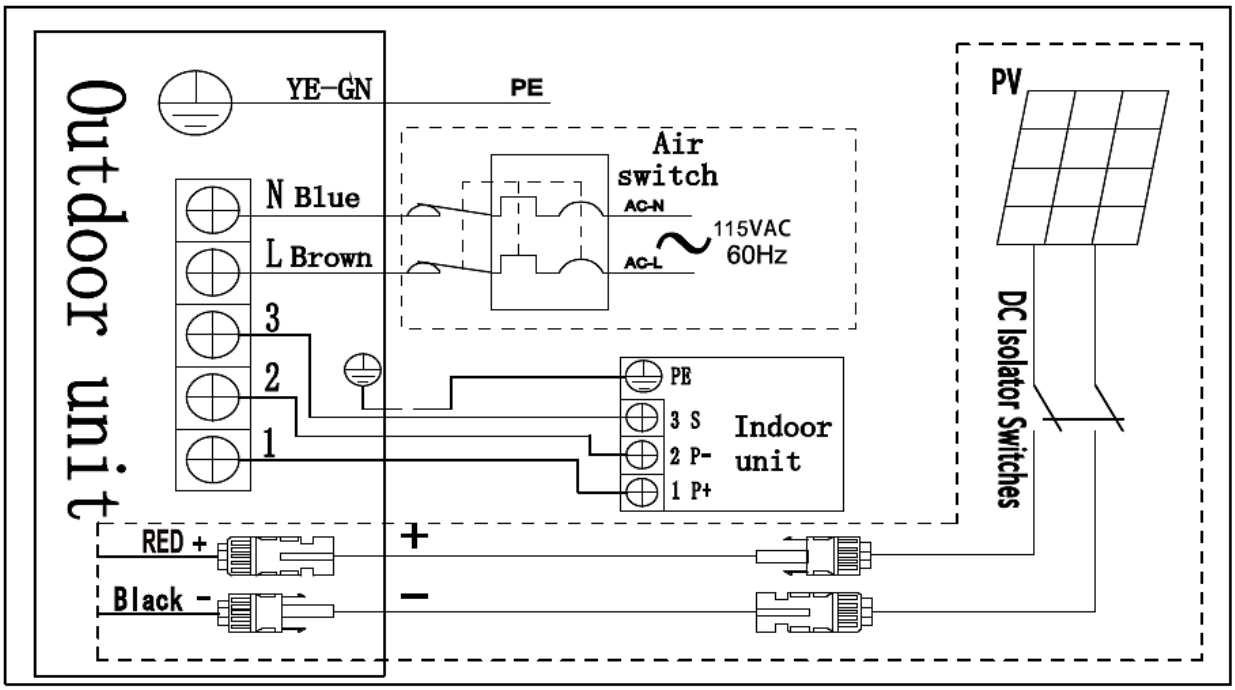

24K WIRING DIAGRAM (208-240VAC)

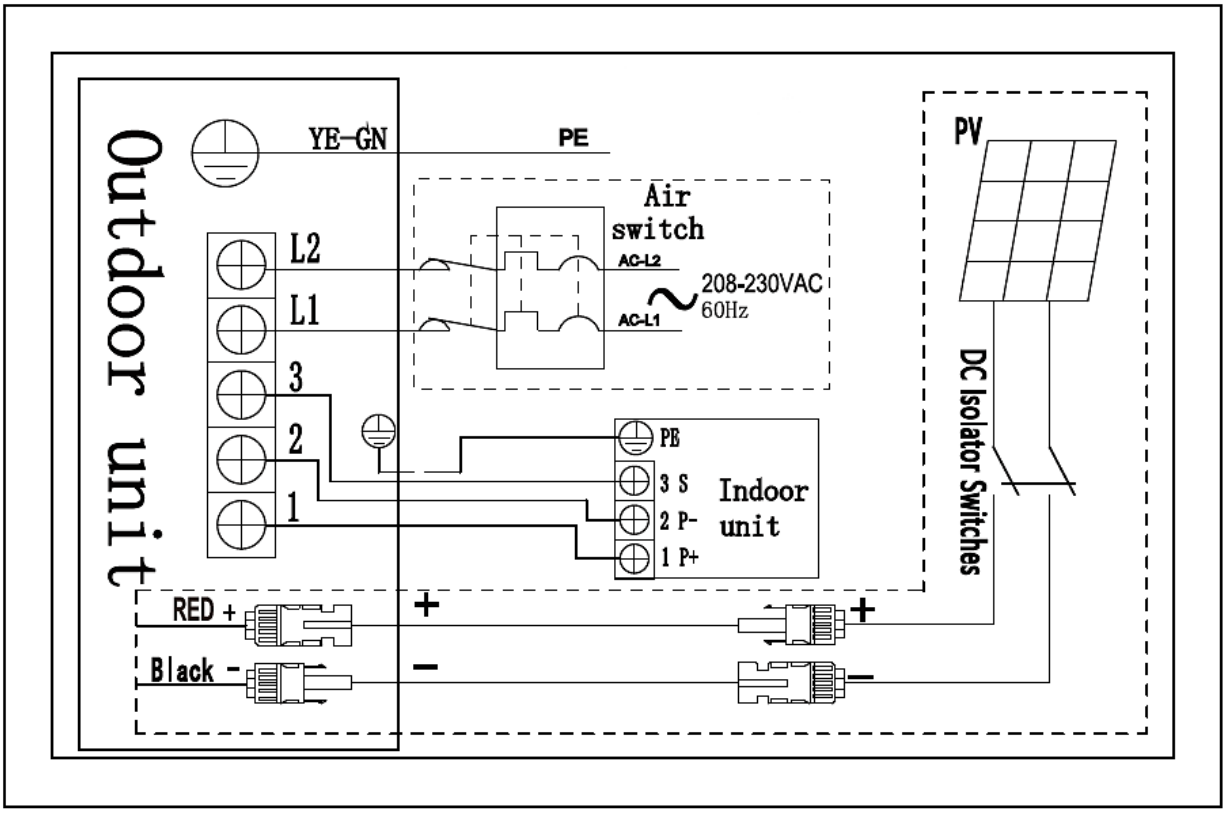

9.5 INSTALL REFRIGERANT LINE SET

The refrigerant line set is made of copper tubing, factory-assembled with quick-connect fittings to ensure leak-proof connections. The quick-connect fitting features a double-sealing system with an automatic safety valve that releases refrigerant only when the outdoor unit is connected and sealed.

CAUTION:

WHEN WORKING WITH THE REFRIGERANT LINE SET:

- Do not change the length of the quick-connect line set. Coil any extra tubing behind the outdoor unit to prevent blocking airflow.
- Extreme caution is necessary to avoid kinking the line set tubing, as it can lead to leaks.
- The minimum bend radius for the line set is 4 inches (102 mm).
- The tubing ends are covered with protective caps to keep dirt or debris from touching the connections. DO NOT remove the caps until just before making the connection.
- If the line set connections are tightened with too little torque, they will leak. If they are tightened with too much torque, the connections could be damaged. Refer to the torque specifications when making the connections.
- Line sets are designed for single-use installation. Reinstalling them may damage the seals and could lead to leaks over time.
- The line sets use a compression fitting that creates a seal without needing thread sealant like Teflon tape. Using sealant could cause leaks over time.
- Consult a licensed HVAC technician if there are any concerns regarding the connection of the line set connectors.

NOTE:

Verify the line set connections are properly aligned, with each refrigerant line set having matching diameters. Unscrew the protective caps, then insert the threaded connector just inside the threads at the opposite end and tighten the first few threads by hand.

INSTALLATION STEPS:

1. Prepare the indoor unit line set by positioning a hand beneath the piping that passes through the opening in the exterior wall. Use the other hand to apply consistent pressure, carefully bend the piping downward toward the wall, taking care to avoid causing damage or kinks to the copper piping.
2. Prepare the line set by carefully unwinding it to the required length needed to connect the outdoor unit to the indoor unit. Unwind only the necessary amount, and keep the remaining line set coiled.
3. Pack the wall hole with the supplied neoprene (or spray foam can be used) to seal the hole, filling any space that was not taken up by the line set and communication wire.

NOTE:

Some outdoor units will have the “M1” and “M2” connectors packaged separately, rather than being attached to the unit. Attach the connectors to the outdoor unit before installing the line set, using 19 – 22 ft-lbs. (25 – 30 Nm) of torque.

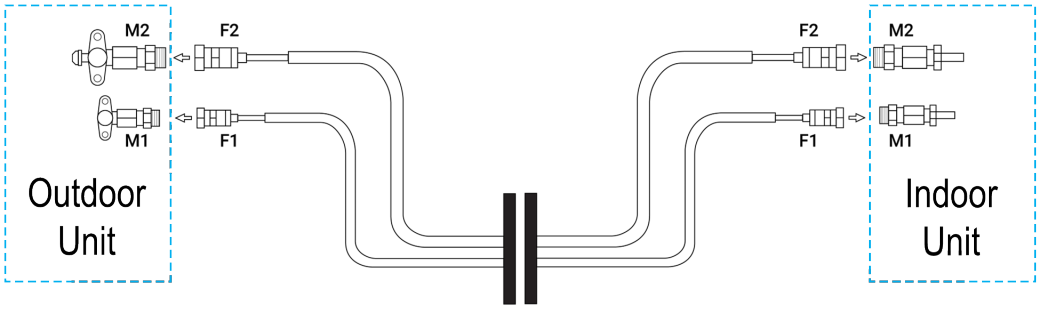

4. Remove the protective cover from the “M1” connector of the indoor unit. (see diagram above)
5. Locate the unrolled end of the line set and remove the protective cover from the “F1” connector. (see diagram above)
6. Connect the line set quick connector “F1” to “M1”. Tighten using 19 – 22 ft-lbs. (25 – 30 Nm) of torque.
7. Repeat the steps for the indoor connector “M2” and the line set connector “F2”. If a line set extension is being used, install it before proceeding to step 8. Refer to the QR code on the previous page for a link to the Line Set Extension Quick Start Guide.
8. Coil the extra tubing behind the outdoor unit.
9. Remove the protective covers from the “M1” connector on the outdoor unit and the F1 connector on the line set.
10. Connect the line set connector “F1” to the outdoor unit connector “M1”. Tighten it to 19 – 22 ft-lbs. (25 – 30 Nm) of torque.
11. Repeat the steps for the indoor connector “M2” and the line set connector “F2”.
12. Install the retaining pins at each indoor and outdoor connection point, “M1” and “M2”. (Example of outdoor connection points with retaining pin shown to the right).

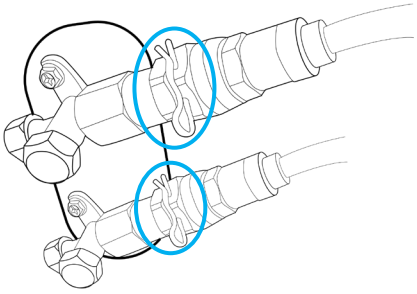

13. Wrap the indoor unit line set connection points with the weather-resistant wrapping that comes with the system.

9.6 RELEASE REFRIGERANT INTO THE SYSTEM

1. Remove the protective cap from the upper valve body.
2. Insert a hex key wrench and turn the top valve counterclockwise until it seats against the outer seal (stops turning).
3. Reinstall the protective cap and tighten it to 22 – 30 ft-lbs. (30 – 40Nm). Take care not to overtighten.
4. Repeat the above steps for the bottom valve.
5. After both valves are open and the caps are reinstalled, complete the leak test in the next section.

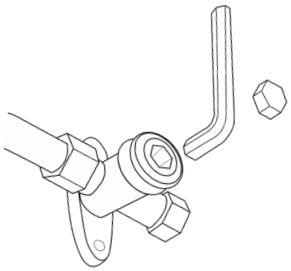

CAUTION:
If the valves are not fully opened, it could lead to system malfunction or damage.

9.7 GAS LEAK TESTS

Inspect all line set connections at the indoor and outdoor units for leaks. There are two different methods to detect gaseous leaks.

SOAP AND WATER METHOD

Use a soft brush to apply soapy water or liquid detergent to all line set connection points on both the indoor and outdoor units. If bubbles appear, it indicates a leak, and the connection needs to be tightened. Tighten the connection and recheck for leaks.

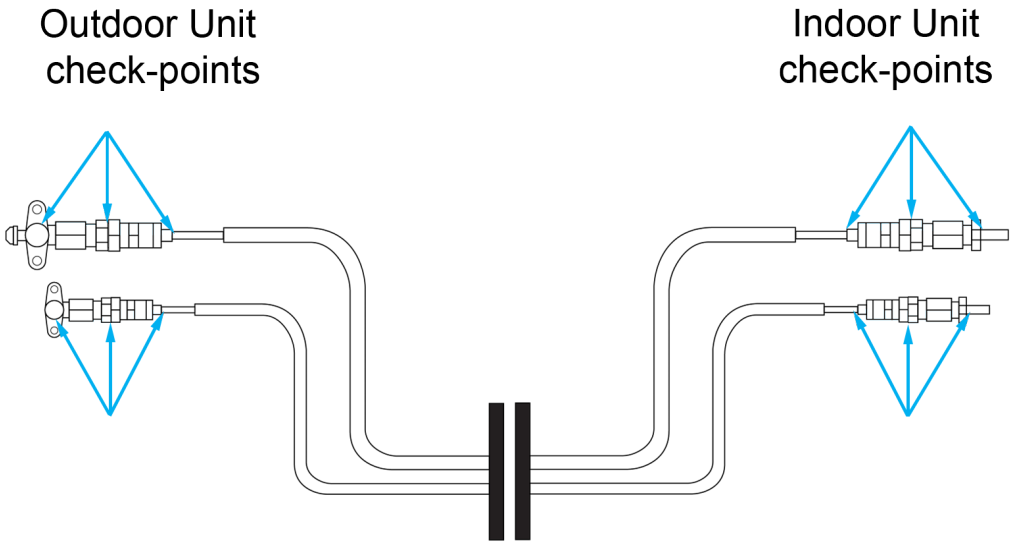

LEAK DETECTOR METHOD

If using a leak detector, refer to the device's operation manual for proper usage instructions.

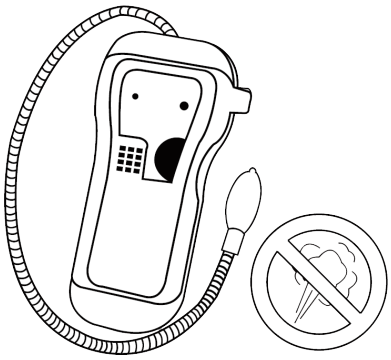

10. PHOTOVOLTAIC MODULE INSTALLATION

10.1 OVERVIEW

This section provides information on installing and safely handling solar Photovoltaic (PV) modules. All instructions must be read and understood before installing the PV modules and electrical connections. The installer should follow all safety precautions listed in this guide during the installation process.

PV modules must be installed in accordance with all applicable codes, including local building regulations such as NEC AS/NZS 4777, AS/NZS 5033, CSA C22.1, and others. The installation must be performed by an approved solar technician.

The solar technician should identify the following:

- The specifications of the solar photovoltaic system include:
- Cable material
- Connecting components
- Brackets and support parts
- Switching and circuit protection

CAUTION:

- Only a qualified technician should install PV modules.
- PV modules are large and need careful handling.
- PV arrays are current-limited sources. Use proper protection measures when working on them, as they contain dangerous DC voltages. Many solar modules produce DC voltage exceeding 30V when exposed to sunlight. Contact with a DC voltage of 30V or more could be potentially dangerous. Do not touch the electrical terminal contacts.
- All electrical connections must use approved MC-4 connectors from the same manufacturer. [AS/NZS 5033 clause 4.3.7 (k)].

DANGER:

- Hazardous voltage circuits!
- Do not touch the module contacts.
- Keep children away from the system during the transportation and installation of mechanical and electrical parts.

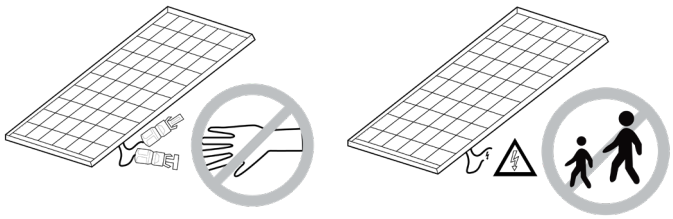

CAUTION:

Cover the entire module with non-transparent material during installation to prevent electricity generation. Avoid touching the ends of live wires. Do not wear metallic rings, watchbands, earrings, nose rings, lip rings, or other metal objects while installing or troubleshooting photovoltaic systems.

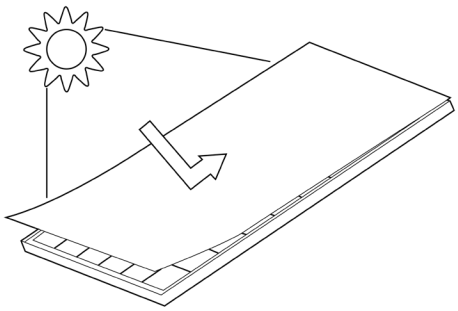

CAUTION:

Use only insulated tools approved for electrical work.
Avoid working on solar modules in wet conditions.

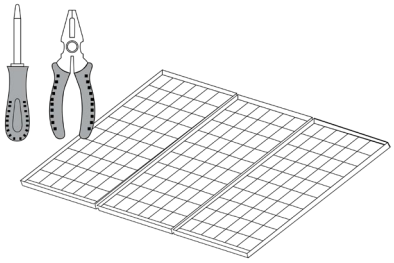

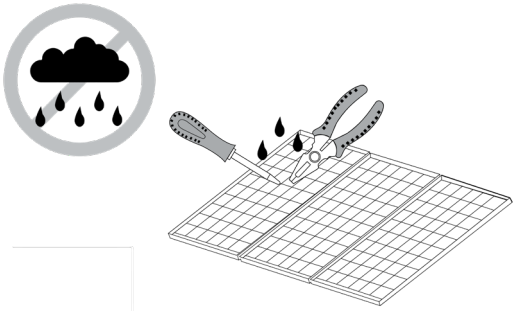

10.2 SOLAR ARRAY WIRING

The array is formed of multiple PV modules connected in a series. The switch disconnectors must be approved for disconnecting solar DC under load. The MC4 connectors must be approved and from the same manufacturer at each joint. Mismatching connectors can cause failures, which may result in fire.

NOTE:

- DO NOT use modules with different models, sizes, or configurations within the same solar array.
- The total system voltage of the solar array must not exceed 380 volts DC open circuit. When installed in areas where temperatures can drop below 20°C, the open circuit voltage will increase. It is recommended that array sizing calculations be performed by a qualified solar technician.
- Both sides of an MC4-type connection must be the same type and manufacturer.
- The minimum supported multistrand solar wire is 14 AWG (2.5 MM^2) or larger.
- Cable installation must follow all local and national codes and regulations.
- A switch rated for DC disconnect must be installed between the array and the outdoor unit. If not, a separate switch can be installed next to the solar array.

Example of DC Wire with Connectors

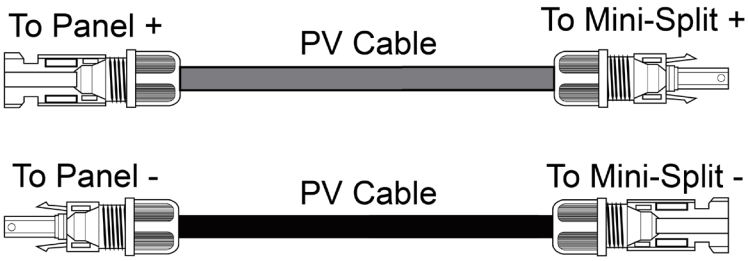

Example of DC System and Connections

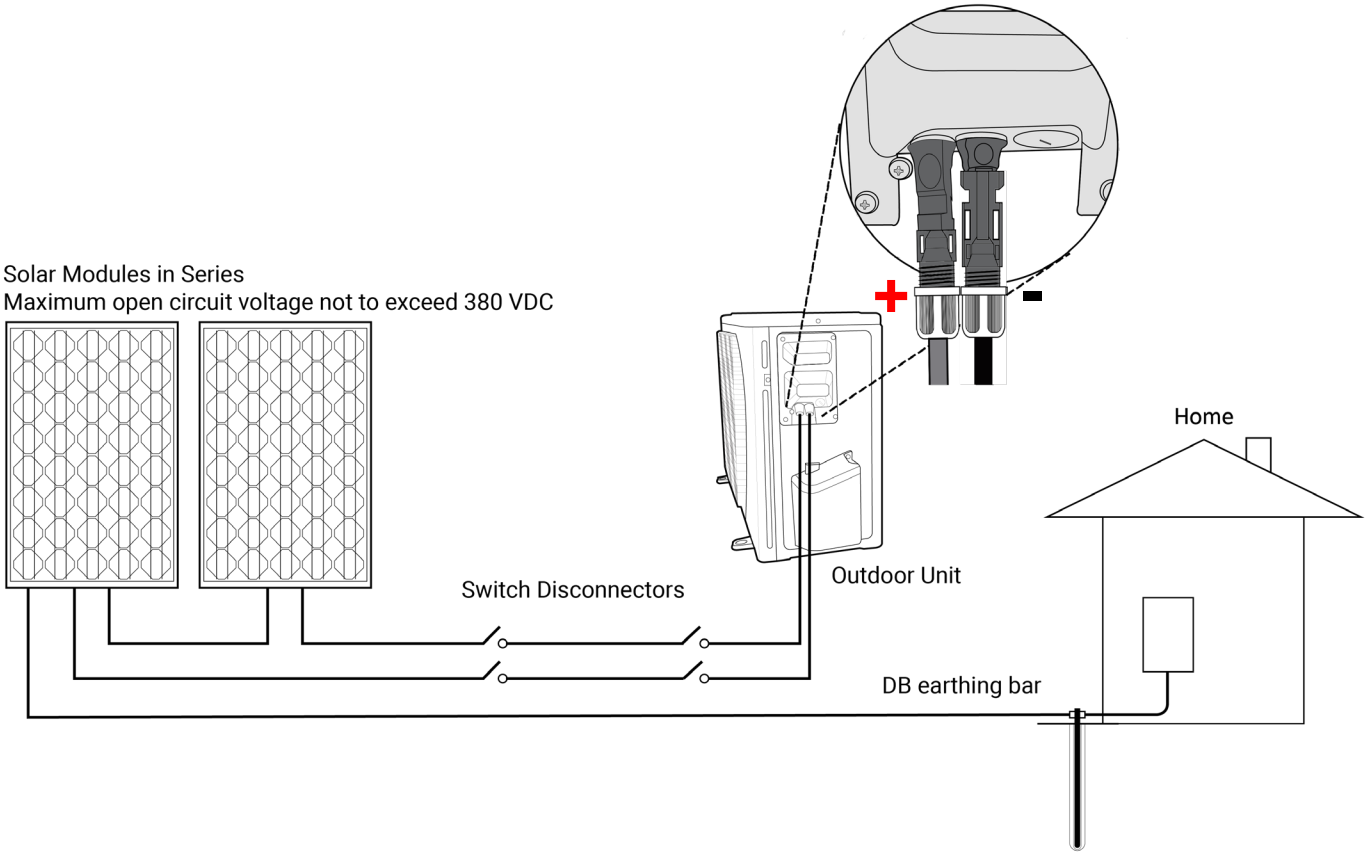

11. ELECTRICAL CHECKS

After installation, confirm that all electrical wiring is installed in accordance with local and national regulations before proceeding.

WARNING:
All wiring must meet local and national electrical codes and be installed by a licensed electrician.

1. Check all wiring connections to ensure there are no loose or uncovered ends that expose bare connections or wires. Using a multimeter, verify the proper voltage at each connection point.
2. Measure grounding resistance using a grounding resistance tester. The resistance must be below 5 ohms.

12. TEST RUN

12.1 BEFORE TEST RUN

Only perform a test run after completing all the following steps:

- Electrical Safety Checks - Confirm that the electrical system is safe and operating properly.
- Gas Leak Checks - Check all flare nut connections and confirm that the system is not leaking.
- Confirm that gas and liquid (*high and low pressure*) valves are fully open.

12.2 INSTRUCTIONS

Perform the test run for at least 30 minutes.

1. Connect power to the unit.
2. Press the ON/OFF button on the remote controller to turn it on.
3. Press the MODE button to scroll through the following functions, one at a time:
4. COOL - Select the lowest possible temperature.
5. HEAT - Select the highest possible temperature.
6. Let each function run for 5 minutes, and perform each of the checks listed in the table below:

CHECK TO PERFORM	PASS	FAIL
No electrical leakage		
Unit is properly grounded		
All electrical terminals are properly covered		
Indoor and outdoor units are securely installed		
All line set connection points do not leak		
Water drains properly from the drain hose		
All line sets are properly insulated		
Unit performs the cool function properly		
Unit performs the heat function properly		
Indoor unit louvers rotate up and down properly		
Indoor unit responds to the remote control		

13. OPERATING INSTRUCTIONS

13.1 HYBRID AND AC OPERATION

The mini-split can be powered by three different methods.

- Solar only
- Solar with supplemental AC
- AC only

SOLAR ONLY

The unit runs entirely on solar energy. The outdoor unit receives solar power and supplies energy to both the outdoor and indoor units. The minimum solar input needed to start the unit is 90 VDC.

During low solar conditions, such as early mornings or cloudy days, the unit may enter sleep mode. In this mode, the compressor turns off, stopping all cooling and heating functions. The unit will attempt to wake up three times: the first attempt 15 minutes after sleep mode begins, the second 45 minutes later, and the last one 1 hour afterward. If all three attempts fail, the unit remains in sleep mode and switches to Low Power (LP) mode. In LP mode, the indoor unit's display shows "LP" on the LCD panel. This safety feature protects the compressor from frequent stopping and starting, which can cause damage. Before trying to restart the unit from LP mode, ensure there is sufficient solar input. To clear LP mode, manually restart by turning the unit off, then back on.

SOLAR WITH SUPPLEMENTAL AC

The unit will operate on solar power combined with additional AC power. This mode is recommended for areas with extended cloudy days, seasons with minimal or no sunlight, or when used at night. The extra AC will provide a consistent power supply to the unit even when solar input is unavailable.

The system automatically prioritizes solar input over AC input. To further restrict the AC input, there is a power-saving feature called the “AC Power Limiter.” This feature can be turned on using the remote control or the phone app. By default, the AC limiter will not automatically turn back on when the power is cycled.

To configure the unit to always power on into AC Limiter mode, perform the following steps:

1. Run the unit in cooling mode and set the fan speed to low.
2. Set the temperature to 90°F.
3. Press the AC Limiter button on the remote 8 times within 10 seconds and listen for the rapid tones.
4. Once the rapid tones are heard, the AC limiter function is always on. To cancel the AC limiter function, repeat steps 1 – 3.

To manually set the amount of AC power that is limited while using solar, see section 13.6.

AC ONLY

The unit is powered solely by an AC input, which can be obtained from the grid or an inverter. This is ideal for customers who want to take advantage of the unit's efficiency but already have an energy storage system that can run the mini-split. Using AC input also means there’s no need to add dedicated solar panels directly connected to the mini-split.

13.2 OPERATING TEMPERATURE RANGES

MODE	ROOM TEMPERATURE	OUTDOOR TEMPERATURE
Cool	61°F – 90°F (16°C – 32°C)	32°F – 131°F (0°C – 55°C)
Heat	32°F – 90°F (0°C – 32°C)	5°F – 86°F (-15°C – 30°C)
Dry	50°F – 90°F (10°C – 32°C)	32°F – 122°F (0°C – 50°C)

Notes:

- **If the air conditioner runs in cooling mode for a long time and the humidity is high (above 80%), water may drip from the unit. If this happens, set the vertical airflow louver to its maximum angle (straight down) and switch to HIGH fan mode.**
- **Optimal performance will occur within the specified operating temperatures. Operating the air conditioner outside these temperatures may activate safety features that could cause the unit to operate abnormally.**
- **The remote control cannot be used to turn on the COOL function when the ambient temperature is below 60°F (16°C). In this instance, use the MANUAL CONTROL button to test the COOL function.** ***See section 13.7.***

13.3 OPTIMAL OPERATION

To achieve optimal operating performance, please note the following:

- Do not place any objects near the air inlets or outlets. Doing so can reduce performance and may cause the unit to shut down.
- Adjust the airflow so it doesn't blow directly on personnel or at a sharp angle.
- Set the temperature to maintain comfortable levels. An extremely low or high setting wastes energy.
- Keep windows and doors shut to enhance performance.
- Use the TIMER function to limit energy consumption (run time).
- Check the air filters regularly and clean them when necessary.

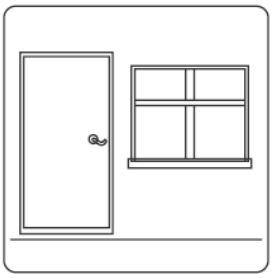

Doors and windows should be kept closed.

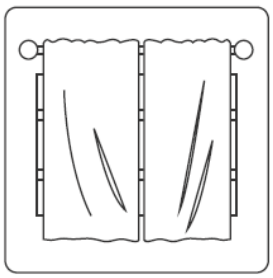

Closing the curtains while heating also helps keep the heat in

13.4 AIRFLOW DIRECTION

Adjusting the vertical and horizontal louvers alters the airflow direction of the indoor unit, helping to prevent discomfort and uneven room temperatures.

CAUTION:

To reduce the risk of injury, read all instructions!

- DO NOT put fingers into the blower's panel or suction side. The high-speed fan inside may cause injury.
- DO NOT operate the unit for long periods in COOL or DRY mode with the vertical airflow set at too steep a downward angle. This could cause condensation to form on the vertical louver surface, allowing moisture or water droplets to fall onto furnishings or the floor.
- DO NOT manually move the vertical louver, as this might cause it to become out of sync. If this happens, follow these steps:
    1. Turn off the power to the unit.
    2. Remove the wireless module from the back of the front cover.
    3. Turn off the power to the circuit at the breaker.
    4. Wait a few seconds and turn the power back on at the breaker.
    5. Reinstall the wireless module into the front cover.
    6. Turn the power to the unit back on.

NOTE:

After a quick restart, the vertical louver may remain static for approximately 10 seconds

NOTE:

The open angle of the vertical louver should not be set too small when using COOL or HEAT mode, as it will restrict airflow and reduce the unit's performance.

VERTICAL AIRFLOW “UP/DOWN” ADJUSTMENT:

This function is performed by pressing the SWING/DIRECT button on the remote control while the unit is operating. The vertical louver can move in small increments with each press or swing continuously up and down automatically.

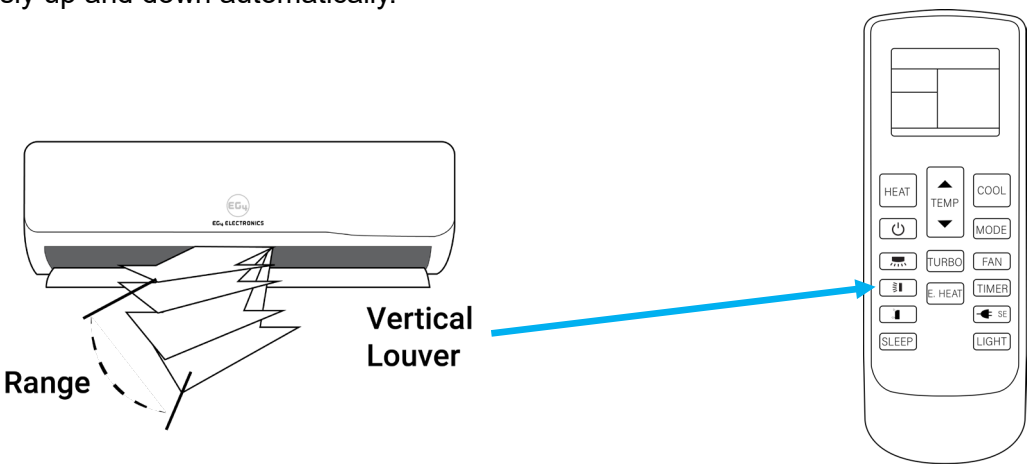

HORIZONTAL AIRFLOW (LEFT/RIGHT) ADJUSTMENT:

The angle of the horizontal louver must be set manually. Move the deflector rod, located on the underside of the unit, by pushing the tab left or right to adjust the airflow from side to side as desired.

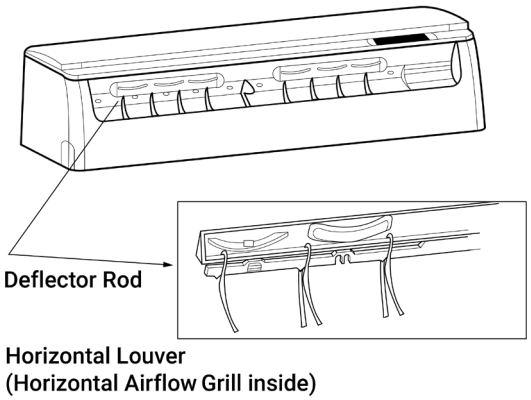

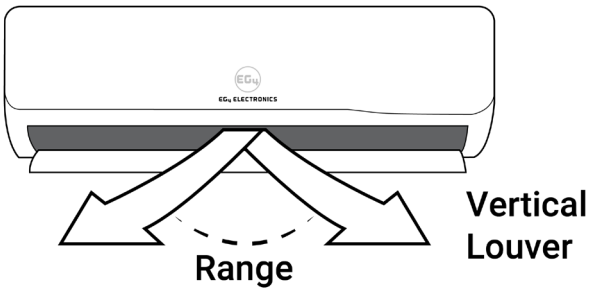

13.5 INDOOR UNIT DISPLAY

The indoor unit LED panel displays information to inform the user about the operating mode and any error codes that may occur.

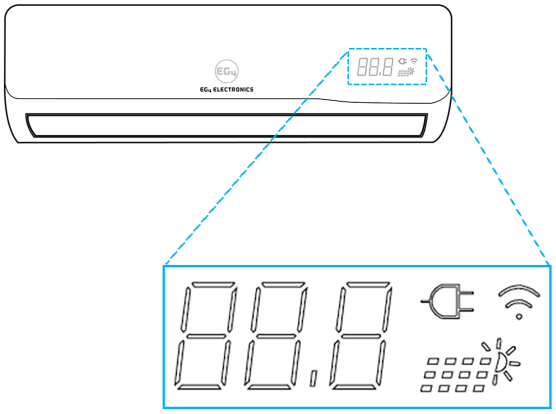

Displayed when the photovoltaic controller operates on hybrid units.

Shown when the Wireless Control feature is turned on (certain units).

When connected to AC power, the light turns white. When the AC power limiting function is enabled on hybrid units, the light turns blue.

This is the temperature display, which also shows operational features and error codes. See “Section 16” for a list of error codes.

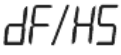

Displayed when the unit is defrosting.

13.6 REMOTE CONTROL OPERATION

The air conditioner comes with an infrared remote that allows for full control of the unit. Some functions on the remote might not be available for all units. For example, the AC power limiter is only found on hybrid models.

BUTTON	DESCRIPTION
Power	Switch the air conditioner off or on.
Mode	Select one of the following modes: • Auto • Cooling • Dehumidifying • Air Supply • Heating
Cool	Sets the unit to enter the cooling mode with a set temperature of 78°F (26°C). • With the unit on or off, press the button, and the unit will enter cooling mode with a set temperature of 78°F (26°C). • In the “timer on” state, press this button to cancel the timer setting and turn on cooling mode with a set temperature of 78°F (26°C). • In sleep state, press this button to run the cooling mode with a set temperature of 78°F (26°C).
Heat	Set the air conditioner into heating mode with a set temperature of 75°F (24°C). • With the unit on or off, press the button and the unit will enter heating mode with a set temperature of 75°F (24°C). • In the timer on state, press this button to cancel the timer setting and turn on heating mode with a set temperature of 75°F (24°C). • In sleep state, press this button to run the heating mode with a set temperature of 75°F (24°C).
Temp	In cooling, heating, and dehumidifying modes, press the “up arrow” or “down arrow” to adjust the temperature setting ranging from 60°F − 90°F (16°C − 32°C). **Note**: The temperature is not adjustable in the air supply mode.
Fan	Select the blower output speed of: "Breeze / Low / Mid / Med-High / High / Auto". **Note**: There is no automatic wind speed in air supply mode.
Timer	Press the "timer" button to turn on the timer, then press the "up/down" button to set the time. The range is 1-24 hours. Press the "timer" button to complete the selection. If the timing has been set, press the "timer" button again to cancel the timing.

Turbo	Enables the fan to run at a maximum speed. When in turbo mode, the fan speed display on the remote control will disappear. The indoor unit will be noticeably louder when running in Turbo mode. **Note:** • Pressing the fan speed will cancel the "Turbo" function. • Enabling Sleep mode will cancel the Turbo function. • Turbo mode cannot be enabled in automatic mode, dehumidification mode, air supply mode, or when the timer or sleep mode is running.
AC Power Limiter	Press the “AC Power Limiter” button to set how much AC power is used. The limit can be set to 25%, 50% and 75% of the AC input. To set or change the AC Power Limiter input level, use the following steps: 1. Press the “AC Power Limiter” button on the remote control. 2. Press the “Down Outlet” button to select the limit percentage of 25%, 50%, or 75%. Each level can be seen on the indoor unit by the 3rd digit on the display panel as follows: 25% will be displayed with a “xx.1”, 50% with a “xx.2”, and 75% with a “xx.3”. 3. After the desired level is selected, press the “AC Power Limiter” button again to exit the setup. **Note:** This feature is only supported with hybrid models. DC power input will not be affected when limiting AC input.
Light	Turns the indoor unit's LED display on or off.
Sleep	Press the "Sleep" button to activate sleep mode. The fan speed and temperature automatically adjust, but the remote control display remains unchanged. The unit will automatically exit sleep mode after 8 hours of continuous operation and revert to its previous running state. **Note:** Sleep mode cannot be turned on in air supply mode.
Up/Down Wind Direction	Adjusts the air output direction up or down.
Left and Right Wind Direction	This feature is not available on this unit.
Electric Heating	This feature is not available on this unit.
Down Outlet	This button enables the configuration of the AC Power Limiter feature. See the “AC Power Limiter” button for more details.

NOTE:

The remote control can switch the temperature display between C° and F°. The unit includes one of two different remote models. Each remote uses a unique button sequence to change the temperature reading using one of the methods below:

- Method 1: Press the TEMP Up and Down buttons simultaneously.
- Method 2: Hold the Power button down on the remote and hold both the TEMP Up button and the Fan button simultaneously for ~5 seconds.

13.7 MANUAL OPERATION

The unit can be operated using the manual control button located beneath the wire cover on the indoor unit. This button is intended for testing and emergency use only. Use this function only if the remote control is lost and it becomes necessary.

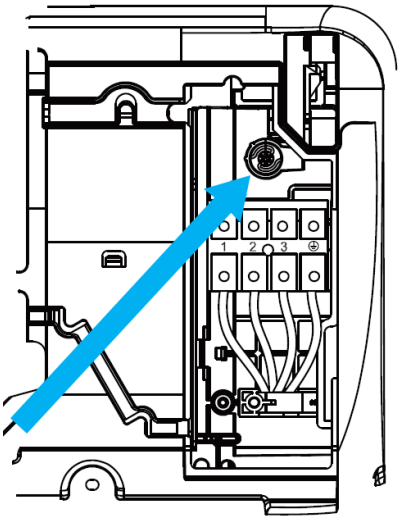

IMPORTANT:

- The unit needs to be turned off before enabling the manual operation function.
- To resume normal operation, use the remote control to activate the unit.

14. PHONE APP

The mini-split can be controlled and monitored through an iOS or Android app. This section explains how to install and set up the app and provides instructions for using it.

14.1 INSTALLATION

Perform the following installation steps to install and set up the app:

1. To download and install the phone app, scan the QR code below. (The same code can also be found on the side of the indoor unit)

iOS and Android

2. Select **Download**.

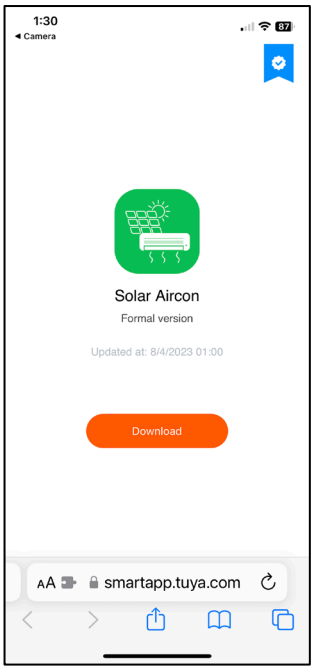

3. Select **Get.**

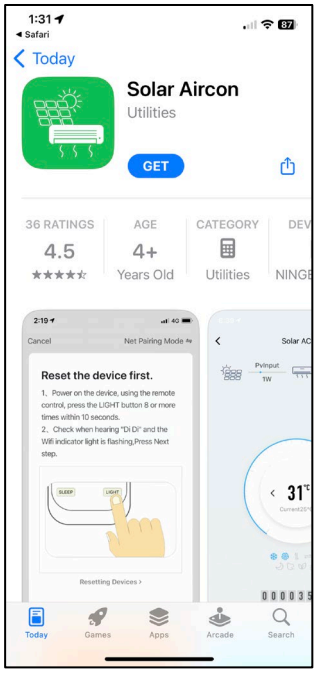

4. Select **Allow**.

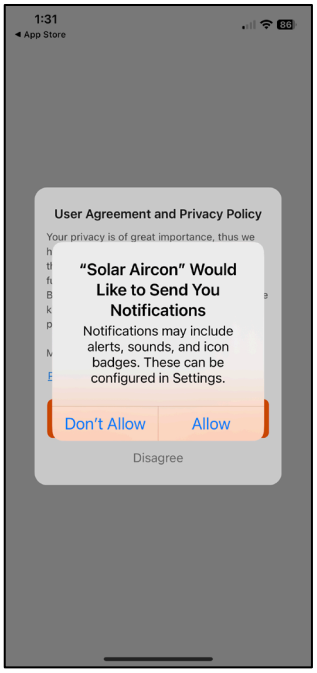

5. Select **Agree**.

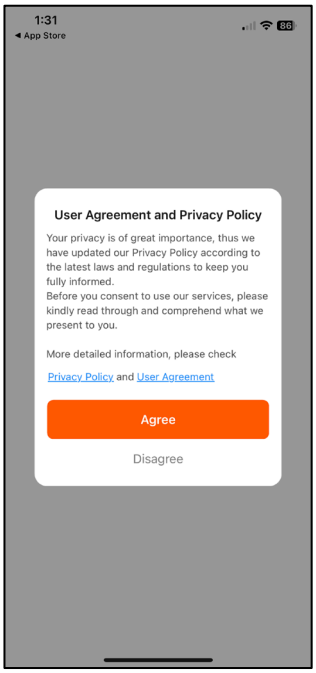

6. Select **Sign Up**.

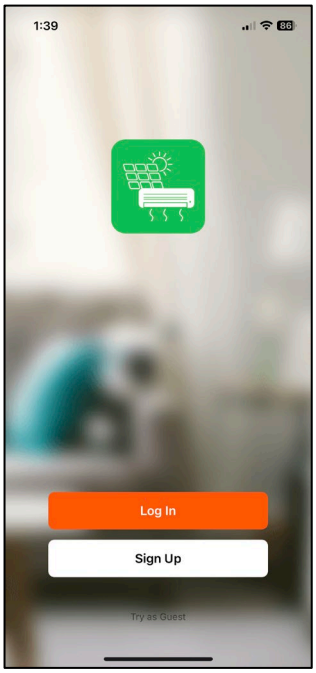

7. Provide an **email address**, select **I Agree**, and select **Get Verification Code**.

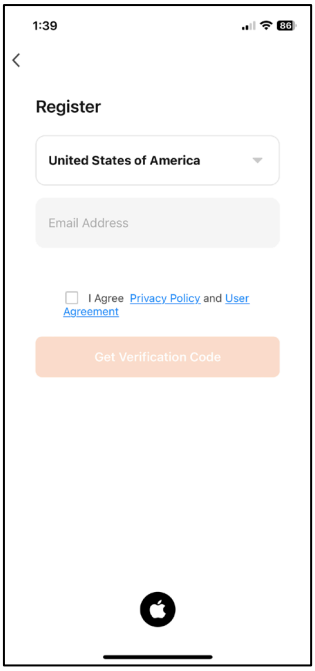

8. Find the verification code sent to the email address used earlier. Enter the code when prompted by the app.

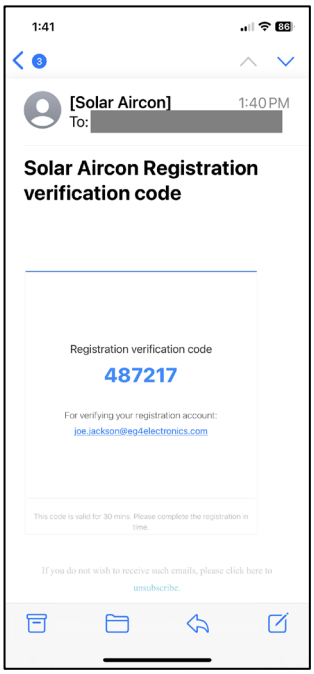

9. Enter a password, then select **Done**.

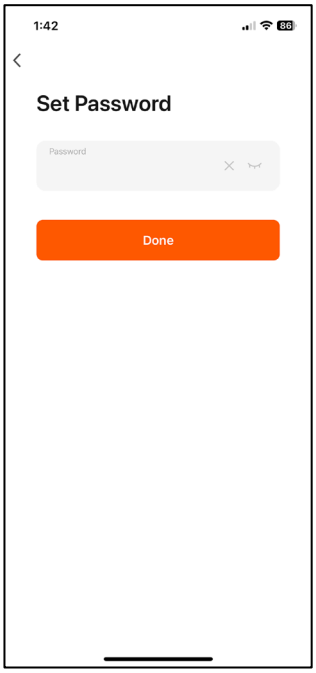

10. Select **Allow**. This will provide access to the hardware device's Wi-Fi.

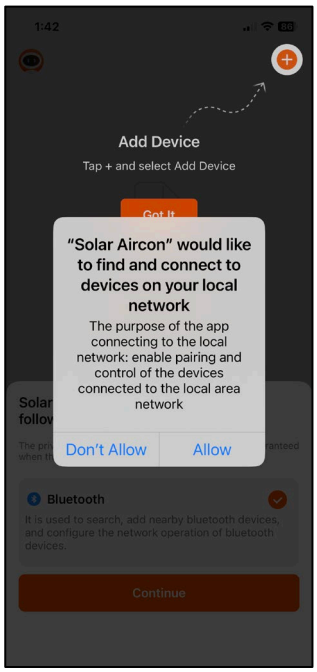

11. Select **OK**. This will provide the app access to the hardware device's Bluetooth.

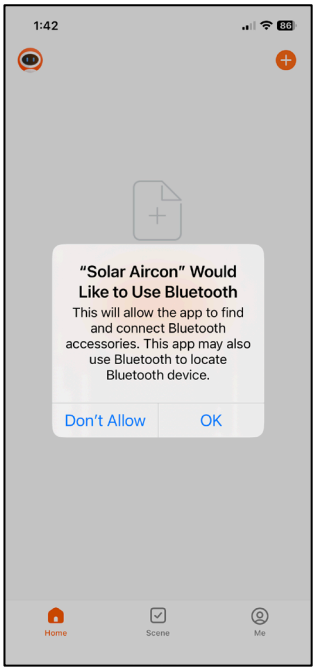

12. Select **Continue.** This will allow the app to use location services

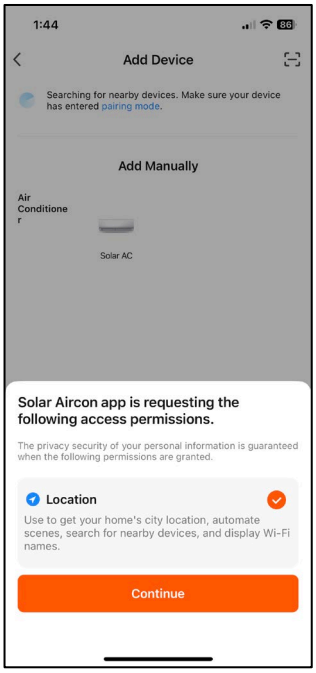

13. Turn the air conditioner on using the remote. Press the **LIGHT** button 8 times or more within 10 seconds. When the incremental beeps are heard, the Wi-Fi indicator should be flashing.

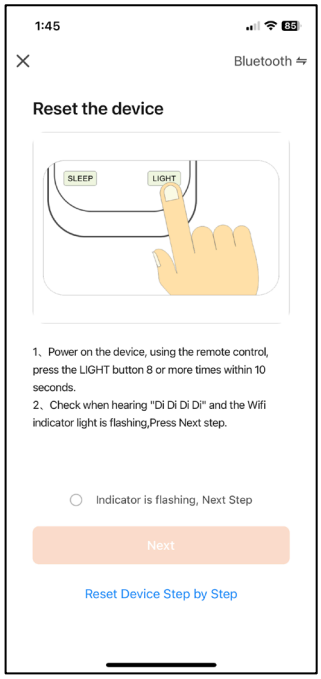

14. Select **Add**. If the mini-split unit does not appear, verify that pair mode is enabled in the previous step.

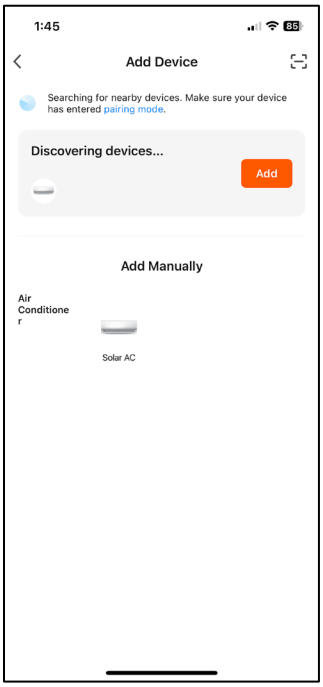

15. The device will be displayed as “Being added”.

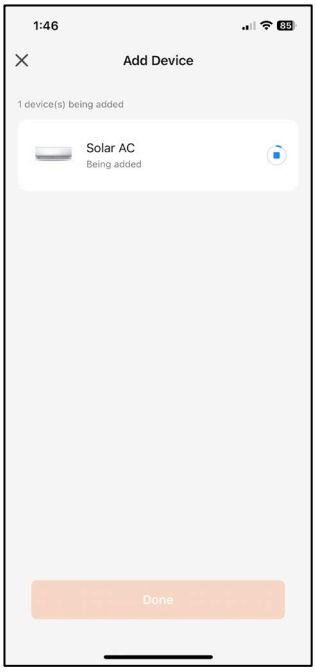

16. Select **Done**. The app is now set up for the mini-split and ready to use.

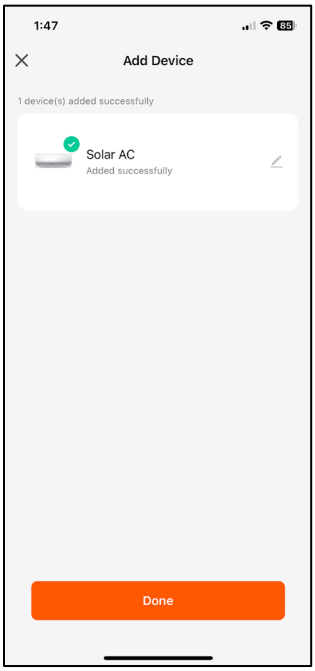

14.2 USING THE APP

The following information shows some of the settings that can be viewed and adjusted using the phone app.

ITEM	DESCRIPTION
A	Displays the system name
B	Select to edit settings within the APP.
C	Real-time PV input measured in watts
D	Real-time AC input measured in watts
E	Displays the current temperature and the set temperature.
F	The illuminated icons represent features that are currently enabled.
G	A counter that displays cumulative energy saving in watt-hours.
H	A pull-up menu that provides settings for the following: • Power • Cooling • Heating • Fan Speed • Mode • Vertical • Light • Eco • Sleep • C°/F° • AC Limiter

Main Screen

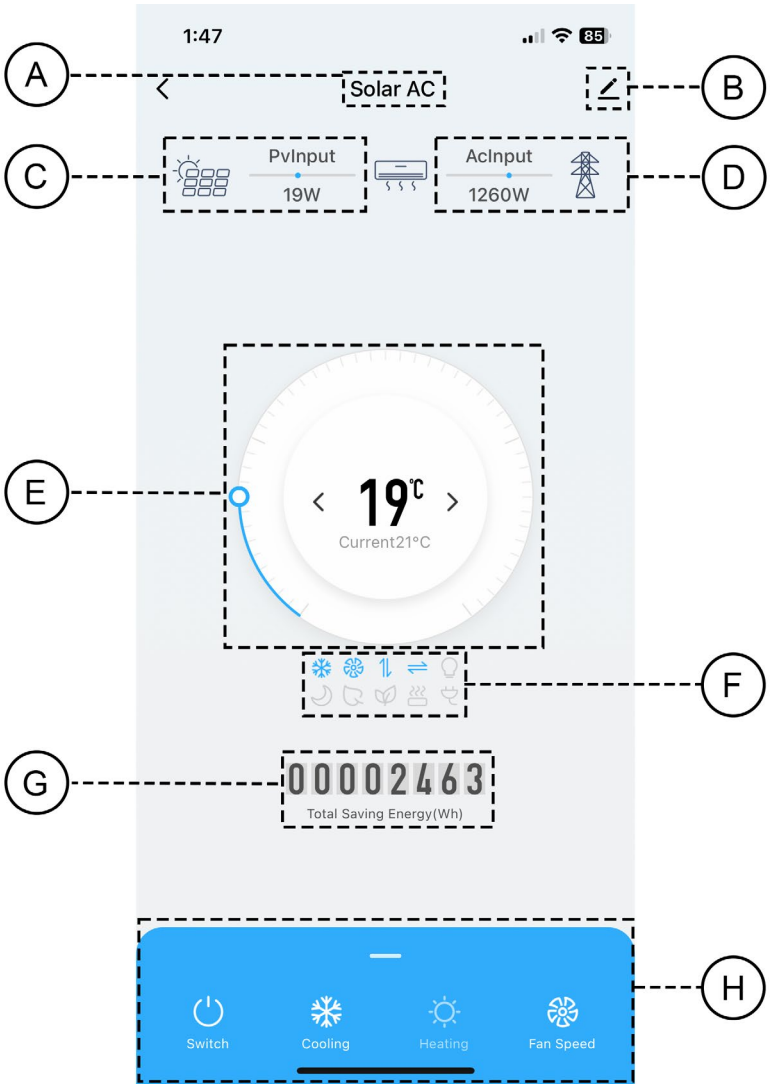

PULL UP MENU SETTINGS

ITEM	DESCRIPTION
Power Switch	Turns the unit on or off
Cooling	Selects the cooling mode
Heating	Selects the heating mode
Fan Speed	Selects the desired fan speed: • Auto • Low • Mid • High • Turbo
Mode	Selects the desired mode: • Auto • Cold • Hot • Wind • Dry
Vertical	Enables or disables the vertical louvers from moving up and down
Horizontal	Does not function on this model.
Light	Turns the indoor unit LED display on or off.
ECO	Enables ECO mode.
Sleep	Enables Sleep mode.
Anion	Does not function on this model.
Electricity Heat	Does not function on this model.
°C/°F	Toggles between Celsius and Fahrenheit.
AC Limiter	Enables the AC limiter function. When enabled, AC power is limited to 0 – 600W.

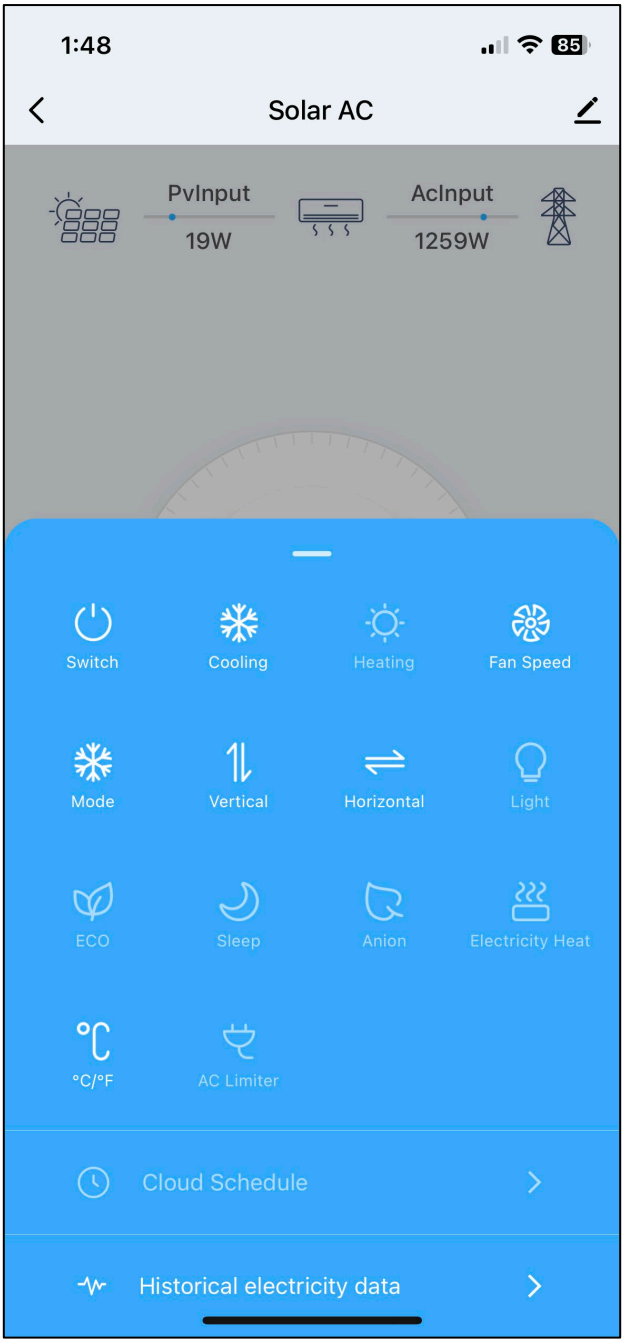

15. CARE AND MAINTENANCE

CAUTION:

Always disconnect the power completely before cleaning and maintenance. Use the remote control to turn off the unit. Then shut off (open) the breaker(s) supplying (AC and DC) electricity to the outdoor unit. Failing to do so could cause electrical shock and injury.

When cleaning the unit:

- DO NOT use benzene, thinner, polishing powder, or similar solvents for cleaning. These could cause the plastic to deform and/or crack.
- DO NOT clean the unit with excessive amounts of water.
- DO NOT touch the metal parts of the unit when removing the filter. Injuries can occur when handling the sharp metal edges.
- DO NOT use water to clean the inside of the unit. Exposure to water can damage the insulation, potentially leading to an electric shock.
- DO NOT use a chemically treated cloth or duster to clean the unit.
- DO NOT touch the air freshening filter for at least 10 minutes after turning off the unit.
- DO NOT clean the unit with combustible cleaning agents. These could cause fire and/or deformation of the unit.
- DO NOT wash the air filter with water hotter than 104°F (40°C).
- DO NOT expose the filter to direct sunlight, as this could cause it to shrink. Allow the filter to dry in the shade.

15.1 CLEANING THE INDOOR UNIT

Wipe the exterior of the indoor unit with a soft, dry cloth. If the unit is very dirty, clean it with a cloth dampened in warm water.

IMPORTANT:

A clogged air filter can significantly reduce the heating and cooling efficiency of this unit. It is recommended to clean the unit every 2 weeks

AIR FILTER AND AIR FRESHENER:

1. Open the front by carefully lifting both ends at the same time. Lifting the lid to a certain angle produces a click, making it self-supporting.

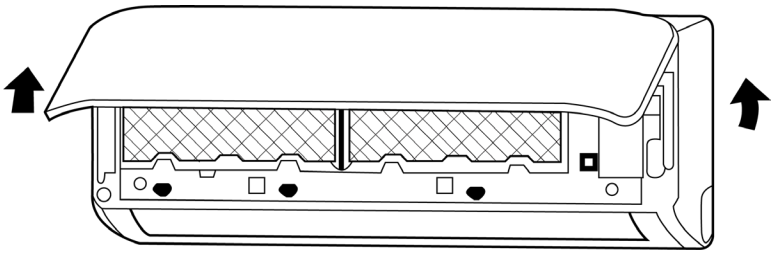

2. Use the filter tabs to lift the filter slightly upward, then pull it outward from the front of the unit. Remove the filter by gently pulling it downward.

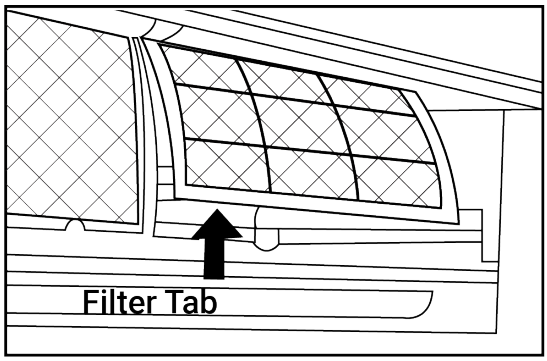

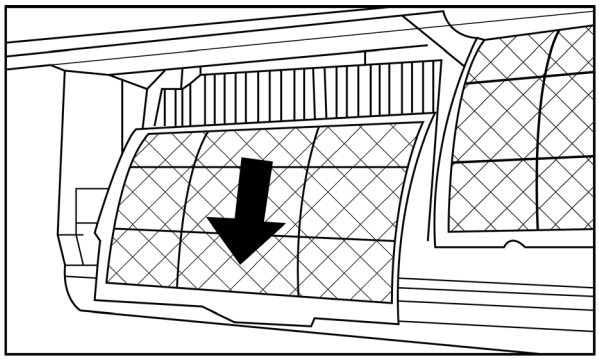

3. Remove the small air-freshening filter from the larger air filter. Clean the large air filter with a vacuum or warm, soapy water. Use a mild detergent and rinse with clean water. Shake off the excess water and let it dry in a cool, dry place. Once the larger air filter is dry, reattach the small air-freshening filter. Replace the small filter if necessary.

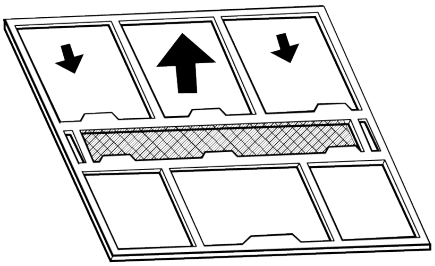

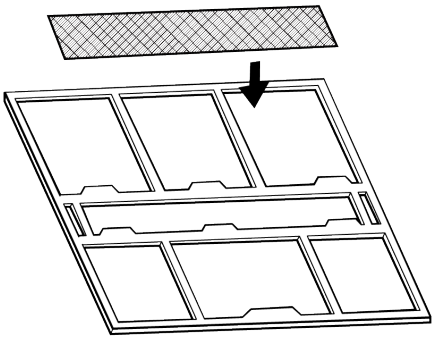

4. Reinstall the air filter by carefully pushing the top into the unit and then lowering the bottom into place.

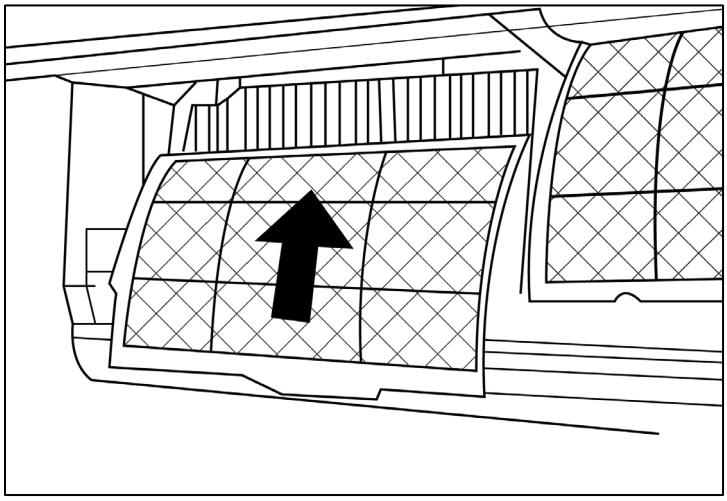

5. Close the front panel of the unit. Make sure the buckles snap securely into the chassis and that the front panel is completely in place and closed.

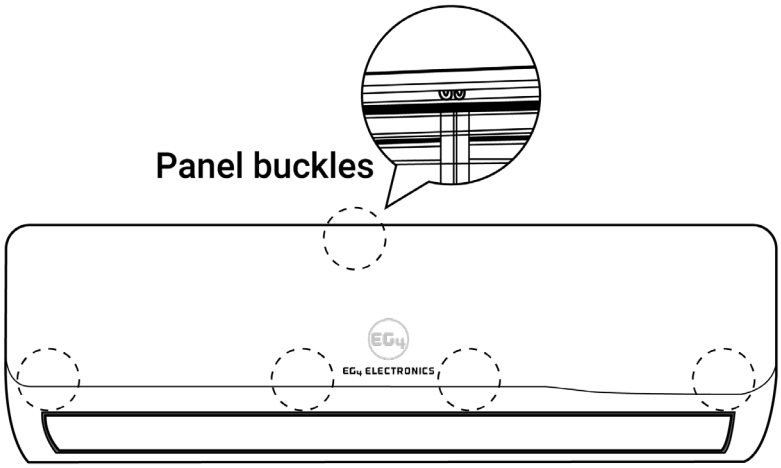

15.2 PREPARATION FOR EXTENDED NON-OPERATION

If the unit is not used for a long period (e.g., from the end of summer to the start of next summer), perform the following:

1. Clean the indoor unit and filters as outlined in section 15.1.
2. Operate the unit in FAN-Only mode for at least 8 hours to dry out the inside of the unit.
3. Turn off the unit. Then, turn off the power to the circuit at the breaker. The unit should be the only appliance on this circuit.
4. Remove the batteries from the remote control.
5. The outdoor unit also requires periodic maintenance. However, it is highly recommended to contact a qualified service professional to perform this.

15.3 PRE-SEASON INSPECTION

After prolonged non-operation, perform the following:

1. Check for damaged or disconnected wires.
2. Check/clean the indoor unit and filters.
3. Check for water and oil leaks.
4. Check for blockages in the airflow inlet and outlet.
5. Change the batteries in the remote.
6. Turn on the power to the circuit breaker when the unit is ready for use.

16. TROUBLESHOOTING

16.1 COMMON ISSUES AND CAUSES

ISSUE	POSSIBLE CAUSE
The unit does not turn on when pressing the Power button	The unit has a 3-minute protection feature that prevents overloading. It will not restart within three minutes after being turned off.
The unit changes from COOL/HEAT mode to FAN mode.	The unit can change its setting to stop frost from forming. Once the temperature rises, it will return to its previous state.
	The set temperature has been reached, so the unit turns off the compressor. The compressor will restart as needed to keep the set temperature.
The indoor unit emits a white mist.	In humid areas, a significant temperature difference between the room's air and the conditioned air can cause white mist.
Both the indoor and outdoor units emit white mist	When the unit restarts in HEAT mode after defrosting, a white mist may appear due to moisture from the defrosting process.
The indoor unit makes noises.	A rushing air sound may occur when the louver resets its position.
	A squeaking sound may occur after running the unit in HEAT mode due to the expansion and contraction of the unit's plastic parts.
Both the indoor unit and outdoor unit make noises	A low hissing sound during operation is typical and occurs when refrigerant gas flows through both indoor and outdoor units.
	A low hissing sound, usually heard when the system starts, stops, or is defrosting, is normal and occurs when the refrigerant gas stops or changes direction.
	Squeaking sound: The normal expansion and contraction of plastic and metal parts, caused by temperature changes during operation, can produce squeaking noises.
The outdoor unit makes noises.	The unit emits different sounds depending on its current operating mode.
Dust is emitted from either the indoor or outdoor unit	The unit may gather dust during long periods of non-use, and this dust will be released when it is turned on. To reduce this, cover the unit during extended periods of inactivity.
The unit emits a foul odor.	The unit may absorb odors from the environment (such as furniture, cooking, and cigarettes) that are emitted during operations.
	The unit's filters have developed mold and require cleaning.
The fan of the outdoor unit does not operate.	During operation, the fan speed is adjusted to maximize product performance.
The operation is erratic, unpredictable, or the unit is unresponsive	Interference from cell phone towers and remote boosters can disrupt the unit's operation. In this case, try the following: • Disconnect the power, then reconnect. • Press the ON/OFF button on the remote control to restart the device.

16.2 PROBLEMS, CAUSES, AND SOLUTIONS

PROBLEM	POSSIBLE CAUSES	SOLUTIONS
Poor cooling performance	The temperature setting may be higher than the ambient room temperature	Lower the temperature setting
	The heat exchanger on the indoor or outdoor unit is dirty	Clean the affected heat exchanger
	The air filter is dirty.	Remove the filter and clean it according to the instructions.
	The air inlet or outlet of either unit is blocked	Turn the unit off, remove the obstruction, and turn it back on
	Doors and windows are open.	Verify all doors and windows are closed during operation.
	Excessive heat is generated by sunlight.	Close windows and curtains during periods of high heat or bright sunshine
	Too many sources of heat in the room (*people, computers, electronics, etc.*)	Reduce the number of heat sources.
	The SLEEP function is activated.	The SLEEP function can lower product performance by reducing operating frequency. Turn off the SLEEP function.
	Solar power alone isn't sufficient. The grid is down, and the air conditioner only runs on solar power.	Turn on grid power
The unit is not working.	Both solar and grid power are off.	Enable grid and/or solar power.
	The remote-control batteries are dead.	Replace batteries.
	The timer is activated.	Turn off the timer function.
Poor heating performance	The outdoor temperature is below 44°F (7°C).	Use a supplementary heating device.
	Cold air is coming in through the doors and windows.	Verify all doors and windows are closed while in use.
An error code appears in the LED display of the indoor unit.	The unit may stop functioning or continue to operate safely. If the indicator light continues to display an error code, wait approximately 10 minutes; the issue may resolve itself. If it doesn't, disconnect both solar and grid power, then reconnect them after 2 minutes. Turn the unit back on. If the problem persists, turn off the unit and contact an authorized service center. See error codes listed in section 16.	

16.3 INDOOR UNIT LED ERROR CODES

CODE	DESCRIPTION
01	Indoor data wrong
03	Indoor and outdoor unit communication wrong
04	Indoor keys stuck
05	Outdoor data wrong
06	Indoor fan motor wrong
31	Indoor air temperature sensor wrong
32	Indoor evaporator temperature sensor wrong
35	Outdoor air temperature sensor wrong
36	Outdoor condenser temperature sensor wrong
37	Air outlet temperature sensor wrong
51	Indoor fan motor lost speed
55	Compressor feedback wrong
58	Outdoor fan motor wrong
72	High voltage protection
73	Current input limitation
75	Compressor high temperature protection
76	Low voltage protection
79	Demagnetization protection control failure
81	PFC over current
82	Total power protection
83	AD abnormal detection
84	Unstable current
85	Compressor setting data wrong
86	IPM_FO edge fault
87	IPM_FO level fault
91	IMP over temperature
92	Compressor lack of phase
93	Compressor lost speed
94	IPM over voltage
95	IPM over current
96	IPM current shortage

NOTES

CHANGELOG

Version 1.0.2

- Replaced pre-vacuumed line set information with pre-charged

Version 1.0.1

- Added EER2 value to specs

Version 1.0

- Initial release

EG4

ELECTRONICS

support@eg4electronics.com
(903) 609-1988
www.eg4electronics.com