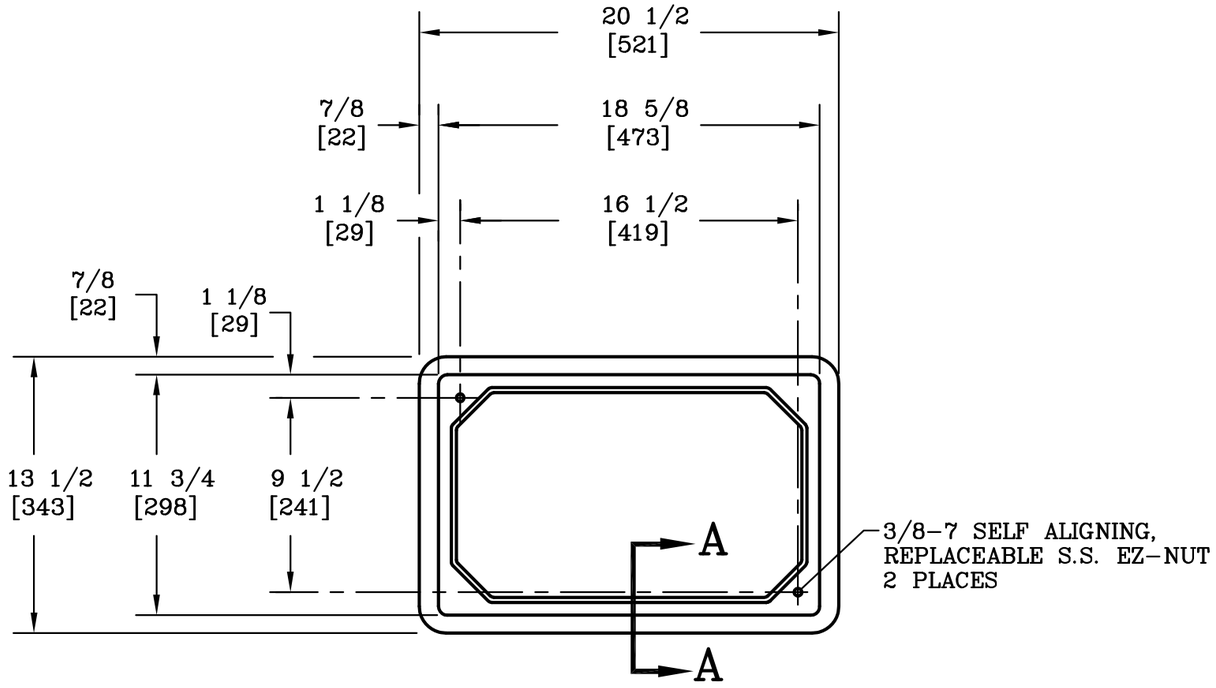

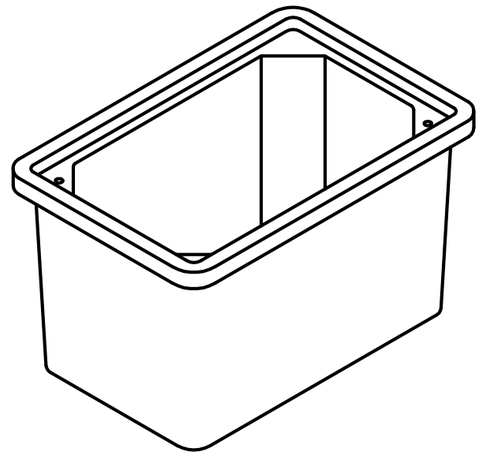

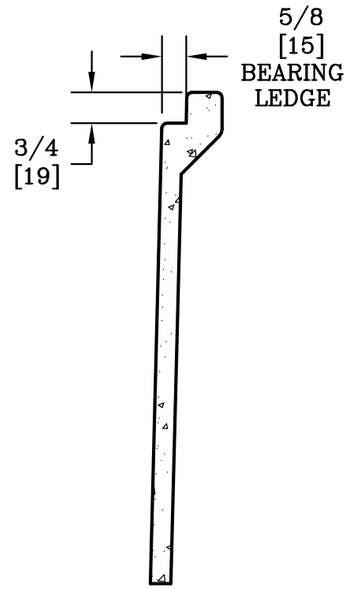

SECTION A-A

SCALE: 3"=1'

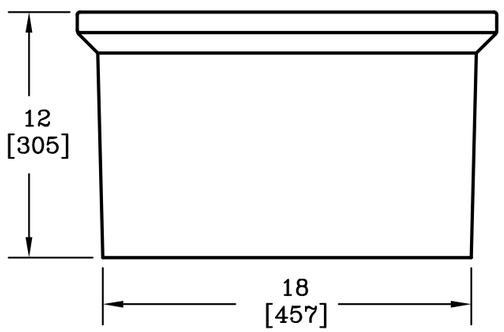

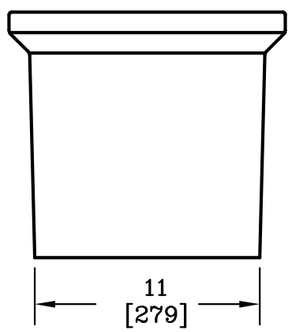

NOTE:

1. DIMENSIONS IN BRACKETS ARE IN MILLIMETERS UNLESS OTHERWISE NOTED.

UL LISTED

DIMENSIONS ARE IN INCHES OR MILLIMETERS IN BRACKETS UNLESS OTHERWISE NOTED.

	BY	DATE
DRN	WRT	2/14/90
CHK	MEF	2/17/89
ENG	JTD	2/20/89
APR	FMS	2/22/89
APR		

WEIGHT: 39# 18kg

SCALE: 1 1/2"=1'

SIZE: B

HUBBELL®
3621 INDUSTRIAL PARK DR
LENOIR CITY, TN 37771
800-346-3062
www.quazite.com

LOC: S

DRAWING DESCRIPTION

QUAZITE® BOX

REV: J

3/12

PROJECT NUMBER: **90241**

SHEET 1 OF 1

DRAWING NUMBER: **PC1118BA12**