Project:

Location:

Product Type:

Contact/Phone:

Model #:

GM40AV
40 Amp Auto-Voltage General Purpose Time Switch

Grässlin's GM40 Series 40 Amp Auto-Voltage Time Switch is a universal electromechanical control, which automatically detects the input voltage without the use of a DIP switch or selector pins. The time switch automatically selects any voltage between 120 VAC and 277 VAC. The time switch controls high amperage loads for lighting, HVACR, pumps, motors, fan controls, access controls, agricultural facilities, and general purpose electrical circuits. The mechanism is mounted in a compact UL Type 3R outdoor enclosure and features a DPDT Switching Configuration standard.



GM40AV

Features

- 40 Amp rating
- Power and status LED indicators
- 24-Hour timer with captive trippers – trippers cannot be lost
- Auto-Voltage selection 120 VAC through 277 VAC
- Up to 48 ON/OFF operations per 24 hour period
- DPDT Switching Configuration standard (2 N.O. and 2 N.C. Contacts)
- Manual 3-way OFF/AUTO/ON override

Ratings

Enclosure dimensions:	8.88"H x 6.61"W x 3"D
Shipping Weight:	3 lbs.
Supply Voltage:	120-208/240 or 277 VAC
Switch Rating:	
N.O. Contacts:	40A, Resistive, 120-277 VAC 1 HP (16FLA, 90LRA), 120 VAC 2 HP (12FLA, 52LRA), 208-277 VAC 30A, Ballast, 120 VAC 20A, Ballast, 277 VAC 15A, Tungsten, 120 VAC
N.C. Contacts:	30A, Resistive, 120-277 VAC 1 HP (12FLA, 30LRA), 120 VAC 2 HP (10FLA, 30LRA), 240 VAC 2A, Tungsten, 120 VAC 10A, Ballast, 277 VAC
Wiring Connections:	Screw box lug terminals
Operating Temperature:	-40ºF to 131ºF (-40ºC to 55ºC)
Operating Humidity:	0 to 95% RH, non-condensing
Electrical Life:	50,000 operations at full load
Switch Configuration:	DPDT (2 N.O. and 2 N.C. Contacts)
Warranty:	Limited 1 year

HVACR

c UL us

#E10694

GM40AV

Model	Voltage	Output	Timing
GM40AV	120-208/240 or 277 VAC	40A DPDT	24-Hour, 15-Minute intervals

Specification

Furnish and install a Grässlin GM40AV Auto-Voltage 24-Hour Time Switch with captive trippers. Input voltage shall be 120-208/240 or 277 VAC in which the unit detects and selects automatically. All units shall incorporate DPDT contacts that shall be rated at 40 Amp, 2 HP @ 277 VAC. To set the starting time and provide time indication, the unit shall have an authentic clock face with hour and minute hands and 15-minute interval captive trippers. LED indicators shall provide power and status feedback. The enclosure shall be UL Type 3R suitable for both indoor or outdoor installation. The time switch shall contain a 3-way OFF/AUTO/ON manual override.

Diagrams

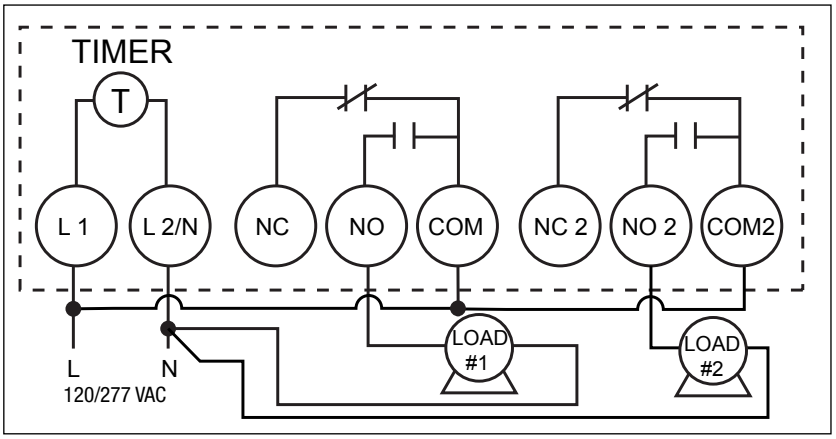

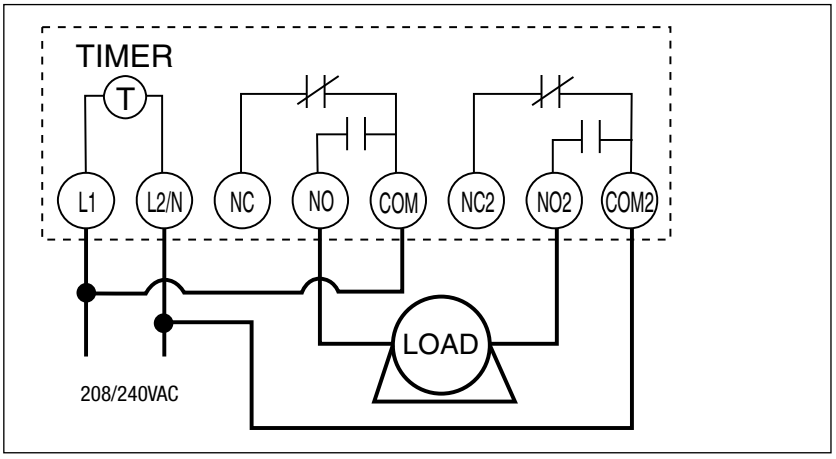

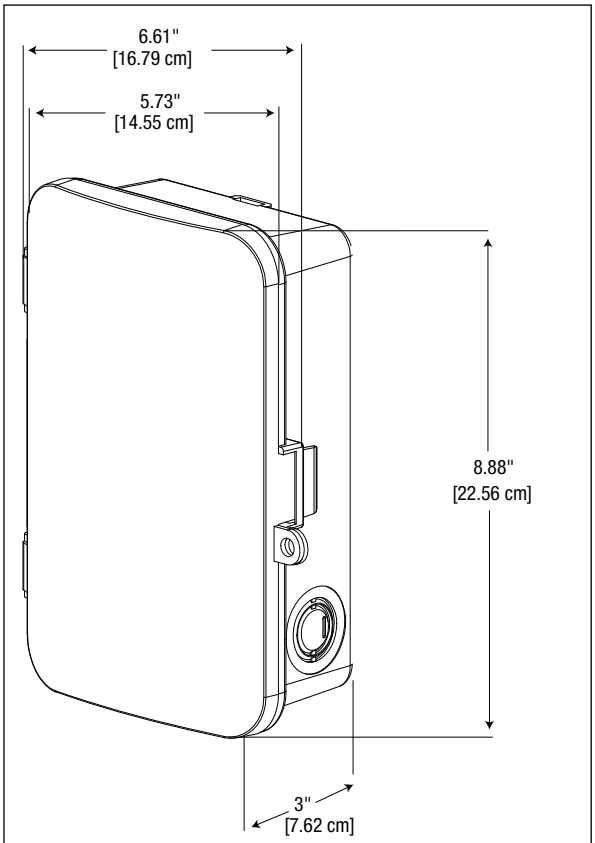

GM40AV Product Dimensions