

GM40AV



Captive Trippers can't be lost

GM40AV Series

40 A Autovoltage General Purpose Time Control

The GM40AV Time Switch is a universal, electromechanical time switch designed for general purpose residential and commercial applications. The robust 40 A time switch automatically detects the input voltage without the use of a DIP switch or selector pins. The time switch automatically selects any voltage between 120-277 VAC. The mechanism is mounted in a compact UL Type 3R outdoor enclosure and can also be easily retrofitted into other Intermatic enclosure types. The time switch features a DPDT switching configuration standard (i.e. two normally open and two normally closed contacts).

Applications

• Lighting Control • Access Control • Commercial Refrigeration
• General Electrical Circuits • Pumps • Motors • Fan Control

Features

- Autovoltage selection 120 VAC-277 VAC
- Captive trippers - trippers cannot be lost
- 40 A rating
- Self-recharging battery backup, "Q" models feature 7-day carry-over
- Power and status LED indicators
- 24-Hour or 7-day models available
- Up to 48 ON/OFF operations per 24-hour period or 42 ON/OFF operations per week on "W" models
- DPDT switching configuration standard (2 NO and 2 NC Contacts)
- Manual three-way ON/OFF/AUTO override switch
- Easy-to-read clock face
- Type 3R outdoor enclosure

Model #	Autovoltage	Switch Type	Enclosure	Battery Backup	Timing
GM40AV	120-277 VAC, 60 Hz	DPDT	Indoor/Outdoor Type 3 Plastic	No	24-hours, 15-min Intervals
GM40AV-Q*	120-277 VAC, 50/60 Hz	DPDT	Indoor/Outdoor Type 3 Plastic	Yes	24-hours, 15-min Intervals
GM40AV-M	120-277 VAC, 60 Hz	DPDT	Mechanism Only	No	24-hours, 15-min Intervals
GM40AV-W	120-277 VAC, 60 Hz	DPDT	Indoor/Outdoor Type 3 Plastic	No	7-days, 2-hour Intervals
GM40AV-QW*	120-277 VAC, 50/60 Hz	DPDT	Indoor/Outdoor Type 3 Plastic	Yes	7-days, 2-hour Intervals

**Q models are Title 20 listed.*

#E10694 #E10694 2002/95/EC patent #6,563,237

Ratings	
Supply Voltage	See Table Above
Switch Type (2 NO/NC Contacts)	DPDT
Switch Ratings (NO Contacts)	
Resistive (NO)	40 A, 120-277 VAC
Ballast (NO)	30 A, 120 VAC; 20 A, 277 VAC
Tungsten (NO)	15 A, 120 VAC
Pilot Duty (NO)	300 VA, 120-240 VAC
Switch Ratings (NC Contacts)	
Resistive (NC)	30 A, 120-277 VAC
Ballast (NC)	10 A, 277 VAC
Tungsten (NC)	2 A, 120 VAC
Motor	
Motor (NO)	1 HP, 16 FLA, 90 LRA @120 VAC; 2 HP, 12 FLA, 52 LRA @ 208-277 VAC
Motor (NC)	1 HP, 12 FLA, 30 LRA @ 120 VAC; 2 HP, 10 FLA, 30 LRA @ 240 VAC
Operating Temperature	-40° F to 131° F (-40° C to 55° C)
Operating Humidity	0-95% RH, Non-condensing
Maximum Power Consumption	7 VA
Wiring Terminals	Screw Box Lug
Electrical Life	50,000 operations at full load
Shipping Weight	1.83 lbs. (.83 Kg)
Warranty	1-year limited

Enclosure Dimensions

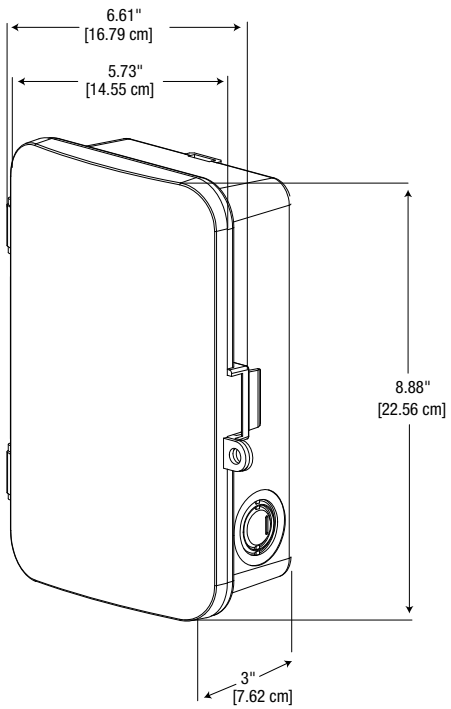

GM40AV Product Dimensions

Wiring Diagram

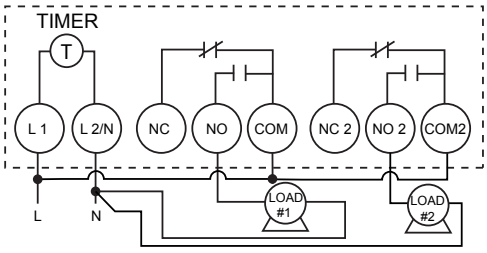

120/277 VAC

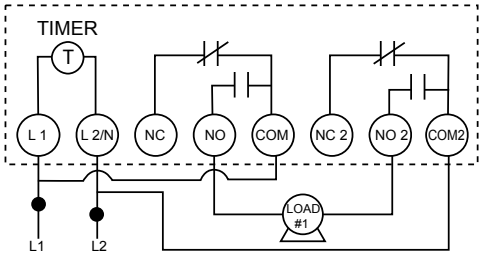

208/240 VAC

SPECIFIERS GUIDE

Furnish and install a Grässlin GM40AV_____Auto-Voltage 24-Hour or 7-Day Time Switch with captive trippers. Input voltage shall be 120-277 VAC which the unit detects and selects automatically. All units shall incorporate DPDT contacts that shall be rated at 40 A, 2 HP @ 208-277 VAC. To set the starting time and provide time indication, the unit shall have an authentic clock face with hour and minute hands and 15-minute or 2-hour (W models only) interval captive trippers. LED indicators shall provide power and status feedback. The enclosure shall be UL Type 3R suitable for both indoor or outdoor installation. The time switch shall contain a 3-way ON/OFF/AUTO manual override switch. For carry-over: "Q" Models shall have a quartz drive with self-recharging battery backup providing 7-day carry-over.