Catalog Number
Notes
Type

Remote Lamps

ERE

FEATURES & SPECIFICATIONS

INTENDED USE — Single and twin LED remote lamps for indoor and outdoor applications, for use as part of an emergency lighting system, providing light for path of egress.

CONSTRUCTION — Indoor remote heads are injection-molded, engineering-grade, 5VA flame retardant, high-impact resistant, thermoplastic, ivory white or black finish.

Weather-proof (WP) are engineering grade, high-impact resistant thermoplastic, sealed and gasketed, gray or black finish. For use in damp and wet location areas.

Compatible with EU2L REM, ECC REM, EU2C HO, ELM2L LTP, ECR/ECG HO, ECRM HO, ECBRM and EXRM.

Fully adjustable lamp heads.

Suitable for wall or ceiling mount. Mounts to a single-gang switch box.

OPTICS — The typical life of the LED is 10 years.
Round remotes (ERE RD) have one, 0.75W white LED per lamp head. To be powered from low-voltage power sources (3.6V only).

Weather-proof (ERE SGL SQ and ERE SGL WP SQ) have eight, 1W total, white LEDs per lamp head.

Weather-proof (ERE T SQ and ERE T WP SQ) have eight, 2W total, white LEDs per lamp head.

ERE SQ (single and twin) for use with 3.6V, 6V, 9.6V & 12V sensing power source.

INSTALLATION — Suitable for wall or ceiling mount. Mounts to a single-gang switch box.

LISTINGS — cULus Listed with approved Lithonia Lighting products.

Meets UL924, NFPA 101 (current Life Safety Code), NEC, OSHA, Local and State Codes.

Indoor damp location listed (ERE) 50°F to 104°F (10°C to 40°C).

Wet location listed (ERE WP) -22°F to 122°F (-30°C to 50°C).

Available for sale in CA.

WARRANTY — 2-year limited warranty. Complete warranty terms located at:
www.acuitybrands.com/support/warranty/terms-and-conditions

NOTE: Actual performance may differ as a result of end-user environment and application.

All values are design or typical values, measured under laboratory conditions at 25 °C.

Specifications subject to change without notice.

ERE W T RD

ERE W SGL RD

ERE GY SGL WP RD

ERE GY T WP RD

ERE W SGL SQ

ERE W T SQ

ERE GY SGL WP SQ

ERE GY T WP SQ

MOUNTING AND SPECIFICATIONS

All dimensions are inches (centimeters) unless otherwise indicated.

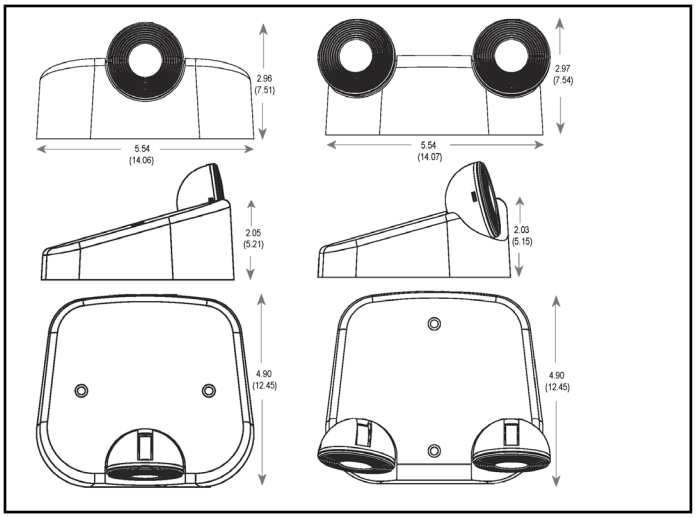

Specifications
Indoor Single Remote Round (ERE SGL RD)

Length: 5.54 (14.06)
Depth: 2.05 (5.21)
Height: 4.90 (12.45)
Weight: .55 lbs (.25 kgs)

Specifications
Indoor Twin Remote Round (ERE SGL RD)

Length: 5.54 (14.06)
Depth: 2.03 (5.15)
Height: 4.90 (12.45)
Weight: .60 lbs (.27 kgs)

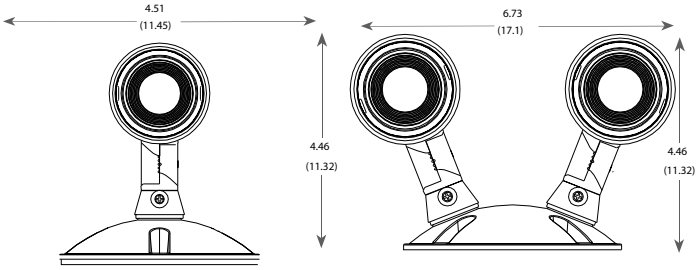

Specifications
Weather Proof Single Remote Round (ERE SGL WP RD)

Length: 4.51 (11.45)
Depth: 1.74 (4.42)
Height: 4.46 (11.32)
Weight: . 0.75 lbs (0.34 kgs)

Specifications
Weather Proof Twin Remote Round (ERE T WP RD)

Length: 6.73 (17.1)
Depth: 1.74 (4.42)
Height: 4.46 (11.32)
Weight: 1.0 lbs (0.45 kgs)

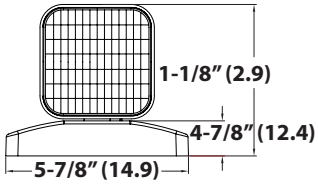

Specifications
Indoor Single Remote Square (ERE SGL SQ)

Width: 5.875 (14.9)
Width (head): 8.625 (21.9)

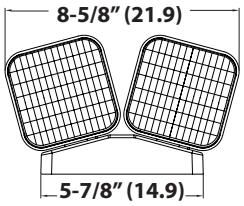

Specifications
Indoor Single Remote Twin (ERE T SQ)

Width: 5.875 (14.9)
Height (head): 1.125 (2.9)
Height: 4.875 (12.4)

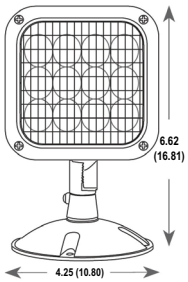

Specifications
Weather proof Single Remote Square (ERE SGL WP SQ)

Length: 4.25 (10.80)
Depth (head): 2.25 (5.71)
Depth (base): .87 (2.20)
Height: 6.62 (16.81)
Weight: .65 lbs. (.29 kgs)

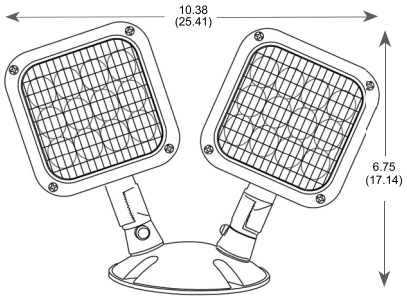

Specifications
Weather proof Twin Remote Square (ERE T WP SQ)

Length: 10.38 (26.37)
Depth (head): 2.25 (5.71)
Depth (base): .87 (2.20)
Height: 6.8 (17.27)
Weight: 1.3 lbs (.54 kgs)

EMERGENCY: One Lithonia Way, Conyers, GA 30012 Phone: 800-705-SERV (7378) www.lithonia.com TechSupport-Emergency@AcuityBrands.com
© 2018-2021 Acuity Brands Lighting, Inc. All rights reserved. Rev. 04/23/21

ORDERING INFORMATION

Example: ERE GY T WP SQ

Series		Housing Color		Number of Lampheads		Lamp Head Type		Options	
ERE	LED Remote lamp	W	Ivory white[1]	**SGL**	Single	**SQ**	Square	(Blank)	Not Required
		GY	Gray[2]	**T**	Twin	**RD**	Round	WP	Weather Proof
		B	Black						

Notes

1 Ivory white housing color not available with WP SQ option.

2 Gray only available with WP option.

COMPATIBLE PRODUCT*

TYPE	ERE SGL RD	ERE T RD	ERE SGL WP RD	ERE T WP RD	ERE SGL SQ	ERE T SQ	ERE SGL WP SQ	ERE T WP SQ
EU2L REM	2	1	2	1	1	0	1	0
EU2C HO	2	1	2	1	2	1	2	1
ELM2L LTP	0	0	0	0	2	1	2	1
ECC R REM ECC G REM	2	1	2	1	2	1	2	1
ECR LED HO ECG LED HO	4	2	4	2	3	1	3	1

* This is in addition to the lamp heads on the product.

EMERGENCY: One Lithonia Way, Conyers, GA 30012 Phone: 800-705-SERV (7378) www.lithonia.com TechSupport-Emergency@AcuityBrands.com

© 2018-2021 Acuity Brands Lighting, Inc. All rights reserved. Rev. 04/23/21