Catalog Number:	U1980-O
Item Description:	200A 4T RL SWY UG
UPC Code:	784572134508

Brand Name:	Milbank
Type:	Ringless Meter Socket
Application:	Meter Socket
Standard:	UL Listed
Voltage Rating:	600 Volts Alternating Current
Amperage Rating:	200 Continuous Ampere
Phase:	1 Phase
Frequency Rating:	60 Hertz
Number Of Cutouts:	0
Cable Entry:	Underground, Side Wireway
Terminal:	Single Lay in Line Side and Load Side Connectors
Mounting:	Surface Mount
Enclosure:	Type 3R, G90 Galvanized Steel with Powder Coat Finish



Additional Specifications:

Number of Jaws:4 Terminal

Hub Opening and Closing Plates:Plain Top

Utility requirements may vary. Always consult the serving utility for their requirements prior to ordering or installing this equipment. This product must always be installed by a licensed electrician. Installation of this equipment may require local electrical inspector approval.

FEATURE TABLE		
ITEM	QTY	DESCRIPTION
A	5	U/L MNTG.EMBOSS
B	1	¼, ½ CONC. K.O.
C	1	¾, 1, 1¼, 1½ CONC. K.O.
D	4	1¼, 1½, 2, 2½ CONC. K.O.
E	1	2½, 3, 3½ CONC. K.O.

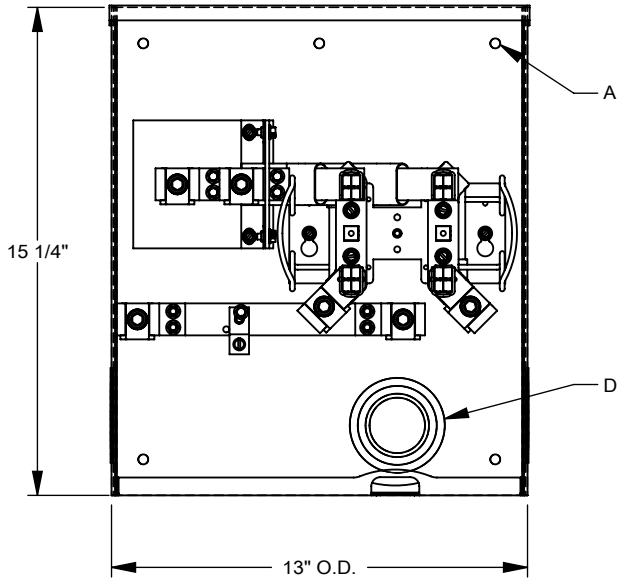

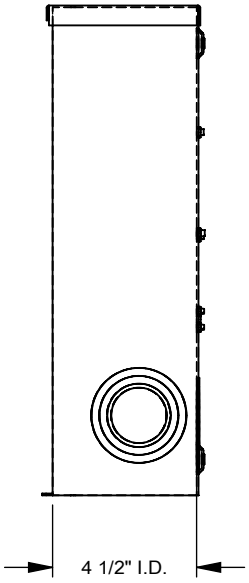

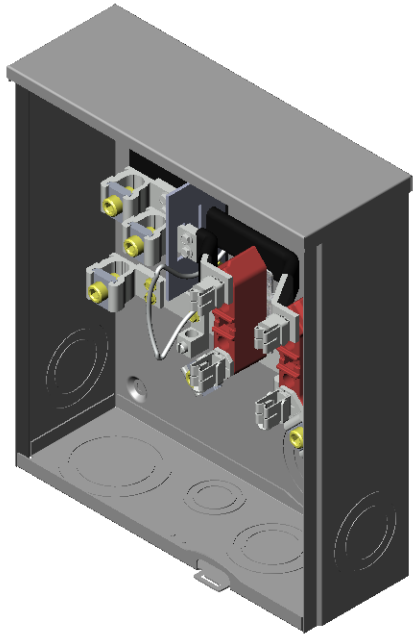

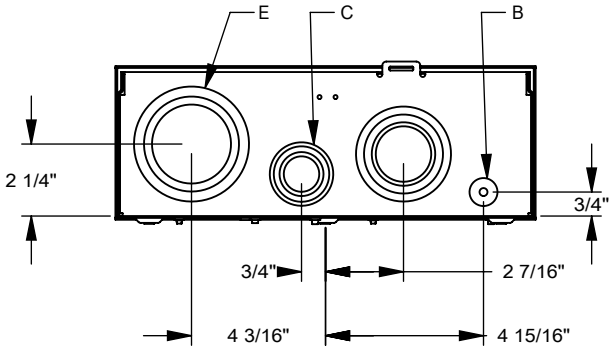

MILBANK
ENERGY AT WORK

Version:

1

All dimensions are +/- 1/16".
Drawing views are not to scale.

Utility requirements for this equipment may vary. Always consult the serving utility for their requirements prior to ordering or installing this equipment. This product must be installed by a licensed electrician. Installation of this equipment may require local electrical inspector approval.