DYMO®



User Guide

Rhino 5200

Advanced Labeling Tool

Contents

About Your New Printer 5
Getting Started 5
Connecting the Power 5
Inserting the Batteries 5
Connecting the Optional Power Adapter 5
Inserting the Optional Battery Pack 6
Recharging the Battery Pack 6
Inserting and Removing the Label Cartridge 6
Setting the Label Width 6
Selecting a Language 7
Selecting Units of Measure 7
Getting to Know Your Printer 7
Power 7
LCD Display 7
Using the Backlight 7
Adjusting the Display Contrast 7
Caption Bar 7
CAPS Mode 8
Shift Key 8
Escape Key 8
Navigation Keys 8
Backspace Key 8
Clear Key 8
Cutter Button 8
Hot Keys 8
Working with Label Files 8
Creating a Label File 8
Adding Labels to a Label File 8
Removing Labels from a File 9
Printing a Label File 9
Formatting a Label 9
Changing the Text Size 9
Changing the Text Style 9
Creating Multi-Line Labels 10
Using International Characters 10
Creating Industrial Labels 10
Creating Cable and Wire Labels 10
Creating Cable Labels 10
Creating Wire Labels 10
Creating Flag Labels 11
Creating Fixed Length Labels 11
Creating Panel Labels 11
Creating Patch Panel Labels 11
Creating Electrical Panel Labels 11
Using Breaker Multipliers 12
Printing Empty Breakers 12
Creating Block Labels 12
Creating Terminal Block Labels 12
Creating 110-Block Labels 13

Creating Module Labels 13
Using Fuse Multipliers 13
Printing Empty Modules 13
Creating Vertical Labels 14
Changing the Label Type 14
Changing the Label Settings 14
Printing Separator Lines Between Cells 14
Using Barcodes 14
Adding a Barcode 14
Editing a Barcode 15
Deleting a Barcode 15
Positioning Human-Readable Barcode Text 15
Hiding Barcode Text 15
Adding Symbols 15
Inserting Symbols 15
Using the Text Library 15
Adding My Library Text 15
Inserting Library Text 16
Deleting My Library Text 16
Creating a Series of Labels 16
Using Simple Serialization 16
Using Simultaneous Serialization 16
Using Advanced Serialization 16
Printing Options 17
Printing Multiple Copies 17
Collating Multiple Copies 17
Pausing Between Labels 17
Advancing the Label 17
Adjusting Print Contrast 18
Using Printer Memory 18
Saving a Label File 18
Recalling a Label File from Memory 18
Deleting a Label File from Memory 18
Cleaning Your Printer 18
Symbols 19
Troubleshooting 20



Figure 1 RHINO 5200 Label Printer

About Your New Printer

With your new RHINO label printer, you can create a wide variety of high-quality, self-adhesive labels. You can choose to print your labels in many different sizes and styles. The printer uses RHINO Industrial label cartridges in widths of 1/4" (6 mm), 3/8" (9 mm), 1/2" (12 mm), or 3/4" (19 mm). RHINO label cartridges are also available in a wide range of materials, such as flexible nylon, permanent polyester, vinyl, non-adhesive tag, and heat shrink tubes.

Visit **www.dymo.com** for information on the full line of labels and accessories for your printer.

Warranty Registration

Visit **www.dymo.com/register** to register your label printer online. During the registration process, you will need the serial number, which is located inside the battery compartment.

Getting Started

Follow the instructions in this section to start using your printer for the first time.

Connecting the Power

The printer can be powered with batteries or AC power. A rechargeable Lithium-ion battery pack and AC power adapter are included with some models. Visit **www.dymo.com** for information on obtaining an optional rechargeable battery pack.

For optimal power, use the optional rechargeable Lithium-ion battery pack for portable use when not connected to the AC power adapter.

To save power, the printer will automatically turn off after five minutes of inactivity.

Inserting the Batteries

The printer can operate using six AA alkaline batteries.

To insert the batteries

1. Press the thumb latch on the back of the printer to remove the battery compartment cover. See Figure 2.

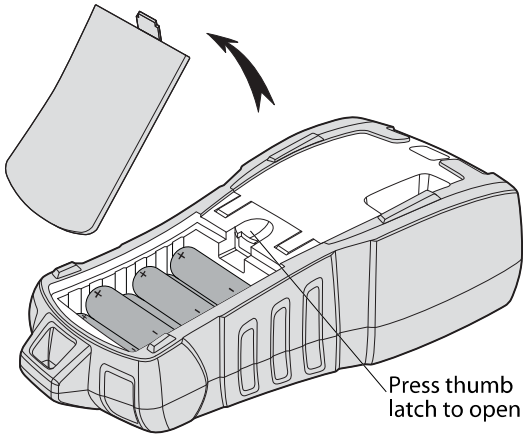

Figure 2

2. Insert the batteries into the battery compartment. See Figure 2.
3. Replace the battery compartment cover.

Remove the batteries if the printer will not be used for a long period of time.

Connecting the Optional Power Adapter

The printer uses a 110V-240V power adapter. Connecting the power adapter with the battery pack inserted recharges the battery pack.

To connect the power adapter

1. Plug the power adapter into the power connector on the top of the printer. See Figure 3.

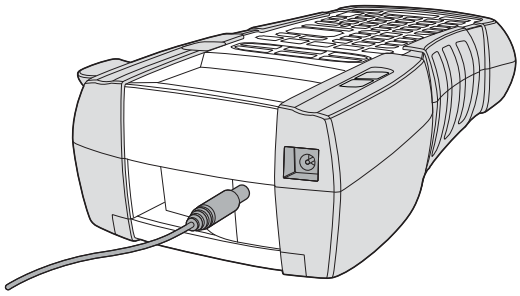

Figure 3

2. Plug the other end of the power adapter into a power outlet.

Inserting the Optional Battery Pack

The hard case kit includes a rechargeable, Lithium-ion battery pack for portable use when not connected to the power adapter.

To insert the battery pack

1. Press the thumb latch on the back of the printer to remove the battery compartment cover. See Figure 4.

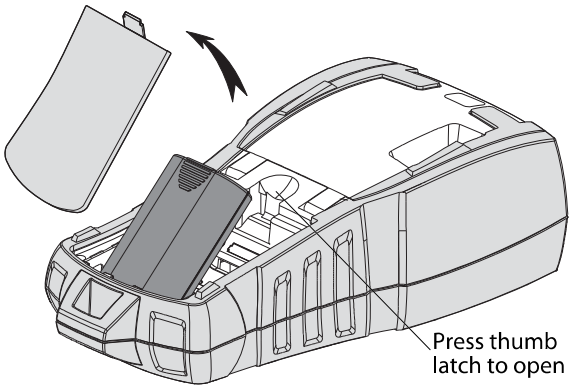

Figure 4

2. Insert the battery pack into the battery compartment. See Figure 4.
3. Replace the battery compartment cover.

Remove the battery pack if the printer will not be used for a long period of time.

Recharging the Battery Pack

The battery pack automatically recharges while the printer is connected to a power source through the power adapter. Charging the battery pack for the first time will take approximately eight hours; recharging the battery pack will take approximately two hours.

Inserting and Removing the Label Cartridge

Your printer comes with a starter label cartridge. Visit **www.dymo.com** for information about purchasing additional label cartridges.

To insert the label cartridge

1. Gently lift the label cartridge door on the back of the printer.
2. Make sure the label and ribbon are taut across the mouth of the cartridge and that the label passes between the label guides. If necessary, turn the ribbon rewind spool clockwise to tighten the ribbon.
3. Insert the cartridge with the label and ribbon positioned between the label guides.

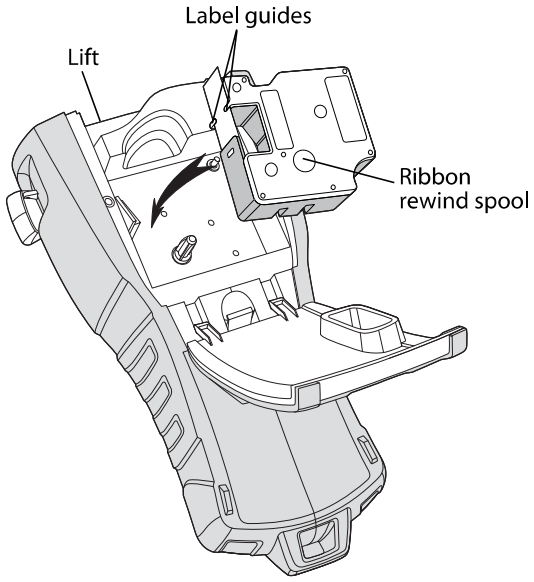

Figure 5

4. Press firmly on the cartridge until the cartridge snaps into place.
   To avoid tape jams, make sure both sides of the label cartridge snap into place.
5. Close the label cartridge door.

To remove the label cartridge

1. Gently lift the label cartridge door on the back of the printer.
2. Gently remove the label cartridge.
3. Insert a new label cartridge as described above.
4. Reset the label width as described in **Setting the Label Width**.

Setting the Label Width

Each time you insert a label cartridge into the printer, you are prompted to set the label width so the printer knows what size label you are currently using. Some of the features you use to design labels depend on the width of the label.

However, to create a label for a label width different than what is currently in the printer, you can set the label width at any time from the Settings menu.

To set the label width

1. Press BARCODE SETTINGS.
   The Settings menu appears on the display.
2. Select **Label width** and press OK.
3. Select the width of the label currently inserted in the printer.
4. Press OK and then select **Done (OK)**.

Selecting a Language

The first time you turn on the power, you are prompted to select your desired language. By default, the language is set to English.
Several language-related features on the printer are determined by the language setting, such as special characters, menu text, and so on. You can change the language selection at any time from the Settings menu.

To select a language

1. Press BARCODE SETTINGS.
2. Select **Language** and press OK.
3. Select the language.
4. Press OK and then select **Done (OK)**.

Selecting Units of Measure

The first time you turn on the power, you are prompted to select your desired units of measure. You can choose to work in inches or millimeters. You can change the units of measure at any time from the Settings menu.

To select the units of measure

1. Press BARCODE SETTINGS.
2. Select **Units** and press OK.
3. Select **inch** or **mm**.
4. Press OK and then select **Done (OK)**.

Getting to Know Your Printer

Become familiar with the location of the feature and function keys on your printer. See Figure 1 on page 4. The following sections describe each feature in detail.

Power

The ⏻ button turns the power on and off. If no keys are pressed after five minutes, the power is turned off automatically.
When the printer is turned off, the current label file and its settings are remembered for the next time the printer is turned on. If the batteries and power adapter are disconnected at the same time, some of the settings are remembered; however, the current label file is lost and you will need to reset the label width when you reconnect the power and turn on the printer.

LCD Display

The LCD display includes a caption bar across the top showing the current label type, and feature indicators on the right side showing which features are currently selected. See Figure 6.



Figure 6

When the text you have entered will not fit on the label as currently defined, the portion of the text that will not fit is shaded. If you attempt to print the label containing text that will not fit, the excess text will not be printed.

Using the Backlight

In low light conditions, you can turn on the backlight to make it easier to see the display. To save power, the back light will turn off automatically after 15 seconds of inactivity. Pressing any key will turn the backlight back on again. The backlight key acts as a toggle to turn the light on and off.

To toggle backlighting on and off

- Press 💡.

Adjusting the Display Contrast

In addition to backlighting, you can adjust the display contrast to help in different lighting conditions.

To adjust the display contrast

1. Press BARCODE SETTINGS.
2. Select **LCD contrast** and press OK.
3. Use the arrow keys to select a value between **0** (lighter) and **8** (darker). The contrast changes as you select the different settings.
4. Press OK, and then select **Done (OK)**.

Caption Bar

The Caption bar at the top of the display shows the current label type and for some label types, additional information about the label, such as size or barcode type.

CAPS Mode

The CAPS SIZE key toggles capitalization on and off. When CAPS mode is turned on, the CAPS indicator is shown on the display and all letters that you enter are capitalized. The default setting is CAPS mode on. When CAPS mode is off, all letters entered appear in lowercase.

To toggle CAPS on and off

- Press SHIFT + CAPS SIZE.

Shift Key

The SHIFT keys are used to select the function or symbol printed above a key. For example, when you press 9*, the number 9 appears in the display; however, if you press SHIFT and then 9*, an asterisk (*) appears in the display.

Escape Key

The ESC key returns you to the previous menu from within any menu without making a selection.

Navigation Keys

The navigation keys operate as follows:

Key	Function
'	Moves one character to the left in the display Returns to the previous menu (can also use ESC)
SHIFT '	Moves one cell to the left in a multi-cell label Moves one label to the left in the display
=	Moves one character to the right in the display Moves to the next menu level (can also use OK)
SHIFT =	Moves one cell to the right in a multi-cell label Moves one label to the right in the display
;	Moves up in a list of items
:	Moves down in a list of items
OK	Selects a menu item

Backspace Key

The BKSP key removes the character to the left of the cursor.

Clear Key

The CLR key clears all current text settings and format, returning the display to the General label type.

Cutter Button

The **Cut** button cuts the label. When printing multiple labels, the printer pauses after printing each label so that you can cut the label. You can turn this feature off, so that multiple labels will print continuously. See **Pausing Between Labels** on page 17.

Hot Keys

A number of Hot Keys are available for creating specific types of labels, adding barcodes, inserting symbols, and using the text from the library. These Hot Keys are described in detail later in this User Guide.

Working with Label Files

The printer creates and stores labels as label files. A label file can contain one or more labels. When you create a new label, you also create a new label file. You can then insert additional labels, remove labels, and store a group of labels as a label file in memory.

Creating a Label File

The printer remembers the last label that you were working on when the power was turned off. You need to clear that label text and formatting before you create a new label.

To create a new label file

1. If necessary, press CLR to clear the previous label and formatting from the display.
2. Type some text using the keypad.
3. Format the text using Text size or Text styles. See **Formatting a Label** on page 9.
4. Save the label to memory. See **Saving a Label File** on page 18.

Adding Labels to a Label File

You can add additional labels to an existing label file.

To add a label to a file

1. Press SHIFT + INSERT SAVE.
2. Select **To the right** to add a label to the right of the cursor position or **To the left** to add a label to the left of the cursor position.
3. Press OK. A new blank label is inserted in the display to the left or right of the current label.

You can move from label to label using the arrow keys.

Removing Labels from a File

You can remove one or more labels from a label file.

To remove a label

1. Press SHIFT + remove RECALL.
2. Select one of the following:
   - **All** to remove all of the labels in the file.
   - **Current** to remove the label at the current cursor position.
   - **Range** and then select the range of labels to remove.
3. Press OK.
   The selected labels are removed from the display.

Printing a Label File

When you print a label file, you choose whether to print all of the labels, the current label, or a range of labels in the file.

To print labels

1. Press # COPIES PRINT. If your label file contains more than one label, the print menu is displayed.
2. Select one of the following:
   - **All** to print all of the labels in the file.
   - **Current** to print the label at the current cursor position.
   - **Range** and then select the range of labels to print.
3. Press OK. The selected labels are printed.
4. Press the **CUT** button and remove the labels.

Formatting a Label

You can choose from a number of formatting options to enhance the appearance of your labels.

Changing the Text Size

You can print the text on your label in several sizes: extra-extra-small, extra-small, small, medium, large, extra-large, and BIG (all capital letters). The text size selected applies to all the text on all the labels in a label file.

The text size available for you to use depends on the width set for the label and the type of label you are creating.

You can also select Auto as the text size. When Auto is selected, the best text size is automatically determined for the height and width of the label you are creating. BIG font is not used when Auto text size is selected.

To set the text size

- Press CAPS SIZE. Each time you press CAPS SIZE, the next available text size is highlighted on the Size feature indicator on the display.

Changing the Text Style

You can print the text on your label in several styles: bold, italic, underlined, and boxed. And, you can choose normal width or narrow width. The text style applies to all the text on all the labels in the label file, including most symbols.

To set the text style

1. Press BARCODE SETTINGS.
2. Select **Text styles** and press OK.
3. Select a style and press OK.
4. Select **On** or **Off** to enable or disable the selected style.
5. Press OK and then select **Done (OK)**.

To set the text width

1. Press BARCODE SETTINGS.
2. Select **Text styles** and press OK.
3. Select **Font** and press OK.
4. Select **Narrow** or **Normal**.
5. Press OK and then select **Done (OK)**.

To insert an underlined 6 or 9 character

- Press and hold 6 or 9 until **6** or **9** appears in the display.

Creating Multi-Line Labels

You can create multi-line labels depending upon the width of the label, as follows:

Label Width	1/4" (6 mm)	3/8" (9 mm)	1/2" (12 mm)	3/4" (19 mm)
# Lines	1	3	3	5

The display only shows two lines of text. Use the arrow keys to scroll through more than two lines.

To create a multi-line label

1. Type the text for the first line, and press ENTER.
2. Type the text for the next line.
3. Repeat these steps for each additional line.

Using International Characters

The printer supports the extended Latin character set using RACE technology. Similar to using a mobile phone keypad, holding down a letter key will scroll through variations of that letter.
For example, if you hold down the letter **a**, you will see **a à á â ã ä å** and so on through all the variations available. The order in which the character variations appear depends on the language you selected to use.

International characters are not available when the language is set to US English.

Creating Industrial Labels

You can quickly create labels for special industrial applications, such as cable or wire wrap, flag, patch panel, electrical panel, terminal block, 110-block, or module. You can also create a fixed length label. Hot Keys are available for each of the label types. The current label type is displayed in the Caption bar. By default, the label type is General with no special formatting, text centered, and the length automatically determined by the amount of text. The Hot Keys always take you to the indicated label type. For example, if you choose Flag and later want a General label, press the General key to remove the Flag settings and return to General label type.

Creating Cable and Wire Labels

You can create several types of labels that wrap around a cable or wire: Cable, Wire, and Flag labels.

Creating Cable Labels



A Cable label is placed around the width of a wire or cable. You can enter up to five lines of text and the text is repeated as many times as possible depending on the size of the text and the length of the label.

You select from a number of different wire gauges or cable lengths. The printer then determines the size of the label. The following table shows the selections available.

CAT X	CABLE 3.0"
COAX	CABLE 4.0"
22-16 AWG	CABLE 5.0"
14-10 AWG (Default)	CABLE 6.0"
8-4 AWG	FIBER 0.1" - 1/4"
3-1 AWG	FIBER 1/4" - 1/2"
1/0-4/0 AWG	FIBER 1/2" - 1"

To create a cable label

1. Press WIRE CABLE.
2. Select the desired wire gauge or cable size, and press OK.

To create multiple labels quickly, see **Creating a Series of Labels** on page 16.

Creating Wire Labels



A Wire label is placed horizontally along the length of a wire or cable. The label text is repeated as many times as possible depending on the size of the text and the width of the label.

To create a wire label

- Press SHIFT + WIRE CABLE.
  The label length is automatically determined by the amount of text entered.

To create multiple labels quickly, see **Creating a Series of Labels** on page 16.

Creating Flag Labels



Flag labels wrap around a wire or cable leaving the text part of the label extending out from the cable. The text on Flag labels is automatically printed on both ends of the label, leaving a blank space in the middle that wraps around the cable. When the label is applied to the cable, both ends of the label are applied back to back leaving a tail or *flag*. The result is a label that can be read from both sides.

To create a flag label

1. Press SHIFT + FLAG VERTICAL.
2. Select **Small**, **Medium**, **Large**, or **XLarge** for the wrap around portion and press OK.
3. Enter or select the length for the flag portion of the label and press OK.
   Select **AUTO** to have the length automatically set to fit the text.

To create multiple labels quickly, see **Creating a Series of Labels** on page 16.

Creating Fixed Length Labels

Normally, the length of the label is determined by the length of the text entered. However, you may want to make a label for a specific purpose that is a fixed length regardless of the length of the text. The factory default fixed length is 1.0" (25 mm). Any change you make to the fixed length setting remains in effect until you change it.

To set the label length

1. Press LIBRARY FIXED.
2. Enter or select the length of the label and press OK.

Any text that does not fit within the fixed length appears shaded in the display and will be cut off when the label is printed.

Creating Panel Labels

You can create two types of panel labels: Patch Panel and Electrical Panel labels.

Creating Patch Panel Labels



A Patch Panel label allows you to label a row of ports on a patch panel. You select the distance between ports, enter the text, and print. The result is a long label with multiple, evenly spaced text for each port.

To create a patch panel label

1. Press MODULE PANELS.
2. Select **Patch panel** and press OK.
3. Enter or select the distance between each port and press OK.
   The default distance is 0.6" (12 mm).
4. Enter or select the number of ports and press OK.
   Each port is separated by a solid black line on the display.
5. Enter the text for each port in the label.
   Use the left or right arrow key to move from port to port.

To create data for the ports automatically, see **Creating a Series of Labels** on page 16.
To print separator lines between the ports, see **Printing Separator Lines Between Cells** on page 14.

Creating Electrical Panel Labels



An Electrical Panel label allows you to label a row of breakers on an electrical panel. You select the breaker size and number of breakers, enter the text, and print. The result is a long label with text for each breaker.

To create an electrical panel label

1. Press MODULE PANELS.
2. Select **Electrical panel** and press OK.

3. Enter or select the breaker length and press OK.
   Select the length that applies to the smallest size breaker in the panel. You can then use breaker multipliers to increase the size of any individual breakers that are larger. The default breaker size is 1.0" (25.4 mm).
4. Enter or select the number of breakers and press OK.
5. Select the breaker multiplier for each breaker and press OK.
   Each breaker is separated by a solid black line on the display.
6. Enter the text for each breaker in the label.
   Use the up or down arrow key to move from breaker to breaker.

To adjust the breaker multipliers after a label has been created, see **Using Breaker Multipliers** on page 12.
To create data for the breakers automatically, see **Creating a Series of Labels** on page 16.
To print separator lines between the breakers, see **Printing Separator Lines Between Cells** on page 14.

Using Breaker Multipliers

Breaker multipliers allow you to adjust the size of individual breakers within an Electrical Panel label.

To adjust the size of an individual breaker

1. Create an Electrical Panel label as described in **Creating Electrical Panel Labels**.
2. Press BARCODE SETTINGS.
3. Select **Current label config.** and press OK.
4. Select **Breaker multipliers** and press OK.
5. Use the up and down arrow keys to select the breaker number to adjust and press =.
6. Select the multiplier for that breaker.
7. Press OK and then **Done (OK)** to return to the label.

Printing Empty Breakers

By default, empty breakers at the end of an Electrical Panel label are not printed. You can choose whether or not to print empty breakers at the end of a label.

To print empty breakers

1. Press BARCODE SETTINGS.
2. Select **Print empty breakers** and press OK.
3. Select **On** and press OK.
4. Select **Done (OK)** to return to the label.

Any empty breakers at the end of an Electrical Panel label will now be printed.

Creating Block Labels

You can create two types of block labels: Terminal Block and 110-Block labels.

Creating Terminal Block Labels

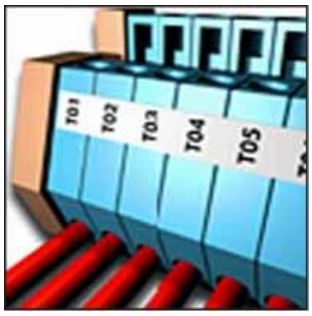

A Terminal Block label is very similar to a Patch Panel label; however, the text is printed vertically for each block.

To create a terminal block label

1. Press BLOCKS.
2. Select **Terminal block** and press OK.
3. Enter or select the number of blocks and press OK.
4. Enter or select the block width and press OK.
   The default block width is 0.5" (17.5 mm).
   Each block is separated by a solid black line on the display.
5. Enter the text for each terminal.
   Use the up or down arrow key to move from terminal to terminal.

To create data for the terminal blocks automatically, see **Creating a Series of Labels** on page 16.
To print separator lines between the ports, see **Printing Separator Lines Between Cells** on page 14.

Creating 110-Block Labels

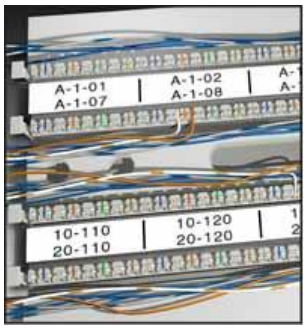

You can only print a 110-Block label on 3/8" (9 mm), 1/2" (12 mm), or 3/4" (19 mm) wide labels.

To create a 110-block label

1. Press BLOCKS.
2. Select **110-block** and press OK.
3. Select the block type and press OK.
4. Select **Single row** or **Dual row** and press OK.
   Each block is separated by a solid black line on the display.
5. Enter the text for each block.
   Use the left or right arrow key to move from block to block. Use the up or down arrow key to move from row to row.

To create data for the blocks automatically, see **Creating a Series of Labels** on page 16.
To print separator lines between the blocks, see **Printing Separator Lines Between Cells** on page 14.

Creating Module Labels



A Module label allows you to label a row of fuses of varying widths. You set the width of a fuse and the number of fuses, enter the text for each fuse, and print. You can use fuse multipliers to adjust the width of individual modules as necessary.

To create a module label

1. Press SHIFT + MODULE PANELS.
2. Enter or select the fuse length and press OK.
   Select the length that applies to the smallest size fuse in the module. You can then use fuse multipliers to increase the size of any individual modules that are larger. The default fuse length is 1.0" (25.4 mm).
3. Enter or select the number of modules and press OK.
4. Enter the fuse multiplier for each module and press OK.
   Each fuse is separated by a solid black line on the display.
5. Enter the text for each module.
   Use the left or right arrow key to move from module to module.

To adjust the fuse multipliers after a label has been created, see **Using Fuse Multipliers**.
To create the data for the modules automatically, see **Creating a Series of Labels** on page 16.

Using Fuse Multipliers

Fuse multipliers allow you to adjust the size of individual fuse modules within a module type label.

To adjust the size of an individual module

1. Create a Module label as described in **Creating Module Labels**.
2. Press BARCODE SETTINGS.
3. Select **Current label config.** and press OK.
4. Select **Fuse multipliers** and press OK.
5. Use the up and down arrow keys to select the module number to adjust and press =.
6. Select the multiplier for that module.
7. Press OK and then **Done (OK)** to return to the label.

Printing Empty Modules

By default, empty modules at the end of a Module label are not printed. You can choose whether or not to print empty modules at the end of a label.

To print empty modules

1. Press BARCODE SETTINGS.
2. Select **Print empty modules** and press OK.
3. Select **On** and press OK.
4. Select **Done (OK)** to return to the label.

Any empty modules at the end of a Module label will now be printed.

Creating Vertical Labels



You can choose to print labels with the text running vertically. Labels with multiple lines of text will print as multiple columns of text.

To create a vertical label

1. Press FLAG VERTICAL.
2. Enter or select a length for the label and press OK.
   Select **AUTO** to have the length of the label automatically set to fit the text.

Changing the Label Type

Once you create a label using one label type, you can easily change the label type without losing your data.

If the data from one label type will not fit in the new label type, the text that will not fit is shaded in the display.

Example: When you change from a multi-cell label, such as a Patch Panel, to a single cell label, such as General or Flag, each cell becomes a new label. All blank cells are deleted.

When you change from a multi-cell label type to another multi-cell label type, make sure the new label type contains the same number of cells.

To change the label type

1. Press the hot key for the new label type.
2. Make any necessary adjustments to the settings for the label type.

Changing the Label Settings

Once you create a specific label, you can change the settings without starting all over again.

To change the label settings

1. Press BARCODE SETTINGS.
2. Select **Current label config.** and press OK.
   The settings for the particular label type are displayed.
3. Make the necessary changes.
4. Press OK and then select **Done (OK)**.

Printing Separator Lines Between Cells

For multiple cell labels, such as Patch Panel, Electrical Panel, Terminal Block, 110-Block, and Module, you can choose to print a separator line between each of the cells.

To print separator lines between cells

1. Create the type of multiple cell label you want.
2. Press BARCODE SETTINGS.
3. Select **Current label config.** and press OK.
4. Select **Separator lines** and press OK.
5. Select **On**.
6. Press OK and then select **Done (OK)**.

A line is printed between each cell.

Using Barcodes

The printer can generate Code 39 and Code 128 barcodes. You can add a barcode to the following label types:

General	Fixed
Wire	Patch Panel
Flag	Module

You can only print a barcode on 3/4" (19 mm) wide labels. You can choose whether or not to print the human-readable text, and you can serialize barcodes.

The barcode prints horizontally along the label. You can choose to print the human-readable text in small print either underneath or above the barcode. Optionally, you can add text before and after the barcode.

Adding a Barcode

The barcode text appears on the label in the display just like any other text. However, if the cursor is positioned within the barcode text, **Barcode** and the type of barcode are displayed in the Caption bar.

To add a barcode

1. Press SHIFT + BARCODE SETTINGS.
2. Select **Barcode type** and press OK.
3. Select the barcode type, and press OK.
4. Enter the text for the barcode within the barcode on the display.
5. Press OK and then select **Done (OK)**.

Editing a Barcode

You can edit the text for an existing barcode.

To edit a barcode

1. Move the cursor anywhere within the barcode text.
   Barcode and the type of barcode are displayed in the Caption bar.
2. Enter any character. A message appears asking if you would like to edit the barcode.
3. Press OK.
   The text of the existing barcode is displayed.
4. Edit the barcode text and press OK.

Deleting a Barcode

A barcode is entered on the label as one character.

To delete a barcode

1. Place the cursor at the end of the barcode text on the display.
2. Press BKSP.

Positioning Human-Readable Barcode Text

You can choose to place the human-readable text above or below the barcode. By default, the label prints with the human-readable text below the barcode.

To change the barcode text location

1. Press SHIFT + BARCODE SETTINGS.
2. Select **HR position** and press OK.
3. Select **Above barcode** or **Below barcode**.
4. Press OK and then select **Done (OK)**.

Hiding Barcode Text

You can choose to hide the human-readable text for the barcode.

To hide barcode text

1. Press SHIFT + BARCODE SETTINGS.
2. Select **Barcode HR** and press OK.
3. Select **Off**.
4. Press OK and then select **Done (OK)**.

Adding Symbols

Your printer includes a set of default symbols to use on your labels. The symbols are separated into several categories:

Electrical	Brackets
Voice/Data	Arrows
Warning	Numbers
Punctuation	Currency

A complete list of the default symbols can be found beginning on page 19.

Some of the more popular symbols can be accessed from the number keys using SHIFT plus the number. For example, pressing SHIFT + **1** inserts an open bracket ([).

Inserting Symbols

Symbols added to a label can be formatted or deleted just like any other character you enter.

To insert a symbol

1. Press SHIFT + SYMBOL GENERAL.
2. Select a category of symbols or select **All** to view all symbols, and then press OK.
3. Use the arrow keys to select the symbol you want.
4. Press OK to insert the symbol on the label.

Using the Text Library

Your printer includes a text library, called My Library. You can add custom text to the library and then use the library to quickly add text to your labels.

Adding My Library Text

Text entries appear in the library list in the order in which they were added to the library.

To add custom text

1. Press SHIFT + LIBRARY FIXED.
2. Select **Add new text** and press OK.
3. Enter the text you want and press OK.
   The text is added to My Library.

Inserting Library Text

Library text added to a label is the same as text entered from thekeypad. Library text can be edited, formatted, or deleted.

To add text to a label

1. Press SHIFT + LIBRARY FIXED.
2. Select the text to add to your label and press OK.
   The text is added to your label.

Deleting My Library Text

You can delete custom text from My Library.

To delete My Library text

1. Press SHIFT + LIBRARY FIXED.
2. Select the text to delete and press BKSP.
   A confirmation message appears.
3. Press OK to delete the text.

Creating a Series of Labels

You can automatically generate labels by creating a series. You create a starting pattern, and then set the increment and count for the series.

You can serialize any number or letter by selecting the position to be incremented, such as the number 2 in 123 or the letter B in ABC. For example, when the 2 is selected in 123 and the increment #=3, the resulting labels would print as 123, 153, and 183.

Letters can be incremented from A to Z and a to z, and numbers from 1 to 9. When the letter Z or the number 9 is reached during serialization, a letter or number is added to increase the increment. For example, Az increments to Aaa, AZ increments to BA, and A9 increments to A10.

Three methods of serialization are available: simple, simultaneous, and advanced.

Using Simple Serialization

Simple serialization creates a series of labels by incrementing one alphanumeric character in the pattern. For example, 101, 102, 103, 104, and so on.

To use simple serialization

1. Enter the text for your label.
2. Press ADV. SER. SERIAL. A box appears around the character where the cursor was positioned.
3. Use the arrow keys to move the cursor to the character you want to increment and press OK.
4. Select the amount you want to increment each label and press OK.
   You can choose to increment in steps up to 10.
5. Select the number of labels you want to create and press OK.
   You can choose to create up to 99 labels.

A new label is added in the display for each label in the series.

Press SHIFT + # COPIES PRINT to print multiple copies of the same serialized label. See **Printing Multiple Copies** on page 17.

Using Simultaneous Serialization

Simultaneous serialization creates a series of labels by incrementing two different alphanumeric characters at the same time. For example, A-101, B-102, C-103, and so on.

To use simultaneous serialization

1. Enter the text for your label.
2. Press SHIFT + ADV. SER. SERIAL.
3. Select **Simultaneous** and press OK.
   A box appears around the character where the cursor was positioned.
4. Select the first character position you want to increment and press OK.
5. Select the second character position you want to increment and press OK.
6. Select the amount you want to increment these characters on each label and press OK.
   You can choose to increment in steps up to 10.
7. Select the number of labels you want to create and press OK.
   You can choose to create up to 99 labels.

A new label is added in the display for each label in the series.

Using Advanced Serialization

Advanced serialization creates a series of labels by allowing you to select two sequences in the pattern and increment them consecutively.

For example, A-101, A-102, A-103, B-101, B-102, B-103, C-101, C-102, C-103, and so on.

To use advanced serialization

1. Enter the text for your label.
2. Press SHIFT + ADV. SER. SERIAL.
3. Select **Advanced** and press OK.
   A box appears around the character where the cursor was positioned.
4. Select the first character position you want to increment and press OK.
5. Select the amount you want to increment this character position and press OK.
   You can choose to increment in steps up to 10.
6. Select the number of times to increment this character position and press OK.
7. Repeat Steps 4 through 6 for the second character position you want to increment.
   You can choose to create up to 99 labels.

A new label is added in the display for each label in the series.

Printing Options

You can choose to print multiple copies of the same label, collate the copies, pause to cut between labels, advance the label, and adjust the print contrast.

Printing Multiple Copies

You can print up to 99 copies of the same label at one time.

To print multiple copies

1. Press SHIFT + # COPIES PRINT.
2. Press the ▲ arrow to increase the number of copies to print (maximum is 99). The default is 2 copies.
3. Press the ▼ arrow to decrease the number of copies.
4. Press OK or # COPIES PRINT to begin printing.

You may notice a brief pause in printing between each label for more complex formats.

When printing is finished, the number of copies to print returns to 2.

Collating Multiple Copies

When printing multiple copies of a label file containing more than one label, all the copies of a label are printed before the next label starts printing. You can choose to have the label file print collated, so each complete copy of the file prints before the second copy starts. The following example shows three copies of a label file containing three labels printed normally and collated.

Normal

A101 A101 A101 A102 A102 A102 A103 A103 A103

Collated

A101 A102 A103 A101 A102 A103 A101 A102 A103

To collate multiple copies

1. Press BARCODE SETTINGS.
2. Select **Collate copies** and press OK.
3. Select **On**.
4. Press OK and then select **Done (OK)**.

Pausing Between Labels

By default the printer pauses after printing each label so you can cut the label. You can turn this feature off to have the labels print continuously.

To set the printer to print continuously

1. Press BARCODE SETTINGS.
2. Select **Pause to cut btw labels** and press OK.
3. Select **Off**.
4. Press OK and then select **Done (OK)**.

Advancing the Label

The default leader space for all labels is approximately 5/16" (10 mm). To add additional blank space to the beginning or end of your label, you can feed the label in 5/16" (10 mm) increments.

To advance the label

1. Press SHIFT + FEED.
2. Press OK to advance the label.

Adjusting Print Contrast

Depending on the label material you choose, you may need to lighten or darken the print on the label.

To adjust the print contrast

1. Press BARCODE SETTINGS.
2. Select **Print contrast** and press OK.
3. Use the arrow keys to adjust the print contrast.
4. Press OK and then select **Done (OK)**.
5. Repeat as necessary until you are satisfied with the print quality.

Using Printer Memory

The printer has a powerful memory feature that can store label files for later recall. The number of label files that can be stored is dependent on the size of the label files.

Saving a Label File

When you save a label file, all the label text and formatting are saved. A label file name can be up to 20 alphanumeric characters in length.

To save a label file

1. Create the labels in your label file.
2. Press INSERT SAVE.
3. Select **New** and press OK.
4. Enter a name for your label file and press OK.
5. Press CLR to start a new label.

Recalling a Label File from Memory

Once a label is saved to memory, you can recall the label to print or edit. Recalling a label replaces the current label.

To recall a label from memory

1. Press REMOVE RECALL.
   The memory locations are displayed.
2. Select the memory location that contains the label you want and press OK.
   A message appears confirming that you want to clear the current label text and formatting.
3. Press OK.

Deleting a Label File from Memory

When you no longer need a stored label file, you can delete the file from memory.

To delete a label from memory

1. Press REMOVE RECALL.
   The saved label files are displayed.
2. Select the label file you want to delete.
3. Press SHIFT + REMOVE RECALL, and then press OK to clear the memory location.

Cleaning Your Printer

Your printer is designed to give you long and trouble-free service, while requiring very little maintenance.

Clean your printer from time to time to keep it working properly.

To clean the print head

1. Remove the label cartridge.
2. Remove the cleaning tool from inside the label cartridge door.

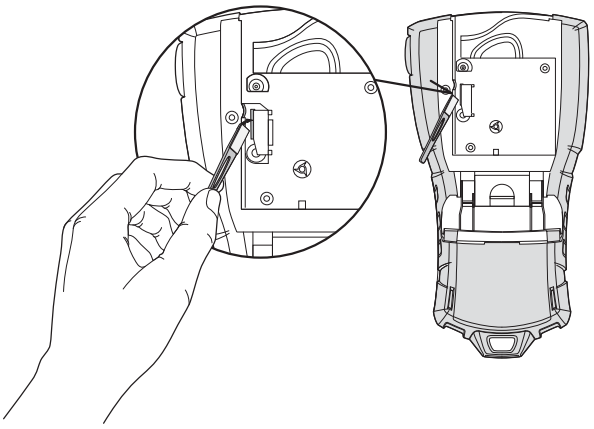

Figure 7

3. Gently wipe the padded side of the tool across the print head. See Figure 7.

Symbols

The following tables show the default symbols by category.

Electrical



Voice/Data



Warning



Punctuation

. ' " , ; ·

: & \ ! ¡

~ ? ¿ _ *

+ - ± / =

≠ ÷ @ # %

< > ≤ ≥

Brackets

( ) [ ] { }

Arrows

← ↑ → ↓

Numbers

½ ¼ ¾

Currency

$ ¢ £ ¥ €

Troubleshooting

Review the following possible solutions if you encounter a problem while using your printer.

Problem/Error Message	Solution
Battery Low **Battery Empty** 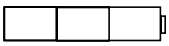	• Attach the power adapter. • Recharge the battery pack. See **Recharging the Battery Pack**. • Insert new AA alkaline batteries.
Poor Print Quality	• Clean the print head. See **Cleaning Your Printer**. • Adjust the Print Contrast. See **Adjusting Print Contrast**. • Check battery level; power may be low.
Label Jam Motor is stalled due to label jam.	• Open the label cartridge compartment and remove the cartridge. • Remove the label, clearing the jam. • Make sure the label passes smoothly through the label guides on the label cartridge and that the label and ribbon are taut across the mouth of the cartridge. See **Inserting and Removing the Label Cartridge**. • When the jam is cleared, press OK to clear the display.
Uneven or slanted printing The cartridge is not positioned correctly.	• Check the label cartridge compartment to make sure the cartridge is inserted properly. See **Inserting and Removing the Label Cartridge**. • Make sure the two levers in the label compartment are locked on either side of the cartridge holding the cartridge in place.
Cannot close the label cartridge lid The cartridge is not inserted correctly.	Make sure nothing is blocking the cartridge cover and that the label cartridge is inserted properly. See **Inserting and Removing the Label Cartridge**.
Unable to return to the previous menu	• Press ESC to return to the previous menu. • Press CLR to return to the display and clear all settings.
Nothing shows on the display	• Ensure the printer is turned on. • Insert new batteries, charge battery pack, or plug in power adapter. • Remove power adapter and batteries, and then reattach power to restart the printer.
Insert label cartridge No cartridge is present.	Open the cartridge compartment and insert a label cartridge. See **Inserting and Removing the Label Cartridge**.
Display text is too light to read	• Turn on backlight. See **Using the Backlight**. • Adjust the display contrast. See **Adjusting the Display Contrast**.
Too many lines Too many lines for this label width.	• Reduce the number of text lines. • Insert a wider label cartridge.
Barcode not allowed Barcodes can only be printed on 19 mm wide labels.	• Replace the label cartridge. • Change the label width.
Print error... The label is jammed.	• Open the label cartridge door and check that the label is not jammed. • Pull a small amount of label from the cartridge to make sure the label moves freely.
No response when pressing keys One of the keys may be jammed.	• Press each key to determine which key is jammed. • Press the jammed key firmly until it returns to its normal position.
How do I remove the backing from the label?	RHINO labels have an easy-peel split back. 1. Locate the split on the label backing. 2. Gently pinch the label length-wise, folding toward the printed side of the label. The label backing will separate. 3. Carefully peel away the backing from the label. 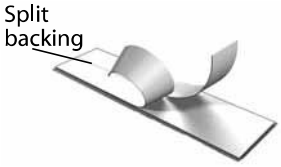

If you still need assistance, visit the DYMO Web site at **www.dymo.com**.

Documentation Feedback

We are constantly working to produce the highest quality documentation for our products. We welcome your feedback.

Send us your comments or suggestions about our user guides. Please include the following information with your feedback:

- Product name, version number, and page number
- Brief description of content (instructions that are inaccurate or unclear, areas where more detail is needed, and so on)

We also welcome your suggestions about additional topics you would like to see covered in the documentation.

Send email messages to: **documentation@dymo.com**

Please keep in mind that this email address is only for documentation feedback. If you have a technical question, please contact Customer Support.

Safety Precautions for Lithium-Ion Rechargeable Battery Pack

Inaccurate handling of a Lithium-ion rechargeable battery may cause leakage, heat, smoke, an explosion, or fire. This could cause deterioration of performance or failure. This may also damage the protection device installed in the battery pack. This could damage equipment or injure users. Thoroughly follow the instructions below.

While Charging

⚠ Danger

- When charging the battery, use dedicated chargers and follow the specified conditions.
- Do not connect directly to an electric outlet or cigarette lighter charger.
- Do not use or store battery close to fire or inside the car where temperature may be over 60°C.

⚠ Warning

- Stop charging the battery if charging is not completed within the specified time.

⚠ Caution

- Thoroughly read this user guide before charging the battery.
- Do not charge in a place that generates static electricity.
- Battery can only be charged within 0°C~45°C temperature range.

When Discharging the Battery

⚠ Danger

- Use the battery only in the specified equipment.
- Do not use or store battery close to fire or inside the car where temperature may be over 60°C.

⚠ Caution

- Do not charge in a place that generates static electricity.
- Battery can only be used within -20°C~60°C temperature range.

Environmental Information

The equipment that you bought has required the extraction and use of natural resources for its production. It may contain hazardous substances for the health and the environment.

In order to avoid the dissemination of those substances in our environment and to diminish the pressure on the natural resources, we encourage you to use the appropriate take-back systems.

Those systems will reuse or recycle most of the materials of your end life equipment in a sound way.

The crossed-bin symbol marked in your device invites you to use those systems.



If you need more information on the collection, reuse and recycling systems, please contact your local or regional waste administration.You can also contact DYMO for more information on the environmental performances of our products.

Device Certification

This product is CE marked in accordance with the EMC directive and the low voltage directive and is designed to conform with the following international standards:

Applied Tests or Technical Standards for R5200 printer: Emission:

EN55022 (2006)
EN 61000-3-2 (2000) + am 14 (2000)
EN 61000-3-3 (1995) + am 1 (2001)

Immunity:

EN55024 (1998) + am 1 + am 2
EN 61000-4-2 (1995) + am 2
EN 61000-4-3 (1996)
EN 61000-4-4 (2004)
EN 61000-4-5 (1995)
EN 61000-4-6 (1996)
EN 61000-4-8 (1995)
EN61000-4-11 (2004)

Applied Tests or Technical Standards for DYMO R5200 LiION Battery Pack:

UL2054
EN61000-6-1
EN61000-6-3

Applied Tests or Technical Standards for DYMO AC/DC power supply:

CISPR 13: 2001 + A1:2003; EN55013:2001 + A1:2003
CISPR 20: 2002 + A1:2002 + A2 :2004; EN55020:2002 + A1:2003
EN 61000-3-2 :2000 + A2:2005
EN 61000-3-3 :1995 + A1:2001
CISPR 22: 1997 + A1:2000 + A2 :2002 Class B; EN 55022: 1998 + A1:2000 + A2 :2003 Class B
CISPR 24: 1997 + A1:2001 + A2 :2002; EN 55024: 1998 + A1:2001 + A2 :2003
UL/UCL 60950-1; FCC PART 15 CLASS B
EN 60950-1: 2001 + A11; BS EN 60950-1: 2002 ; AS/NZS 60950-1



A Newell Rubbermaid Brand

Distributed by: DYMO, Atlanta, GA 30328
800-426-7827: www.dymo.com
©2010 Sanford, L.P.

© 2010 Sanford, L.P. All Rights Reserved. 12/10
No part of this document may be reproduced or transmitted in any form or by any means or translated into another language without the prior written consent of Sanford, L.P.
DYMO and RHINO are trademarks or registered trademarks of Sanford, L.P. All other trademarks are the property of their respective holders.