ERIFLEX®

Distribution Blocks

Single, Two and Four Pole

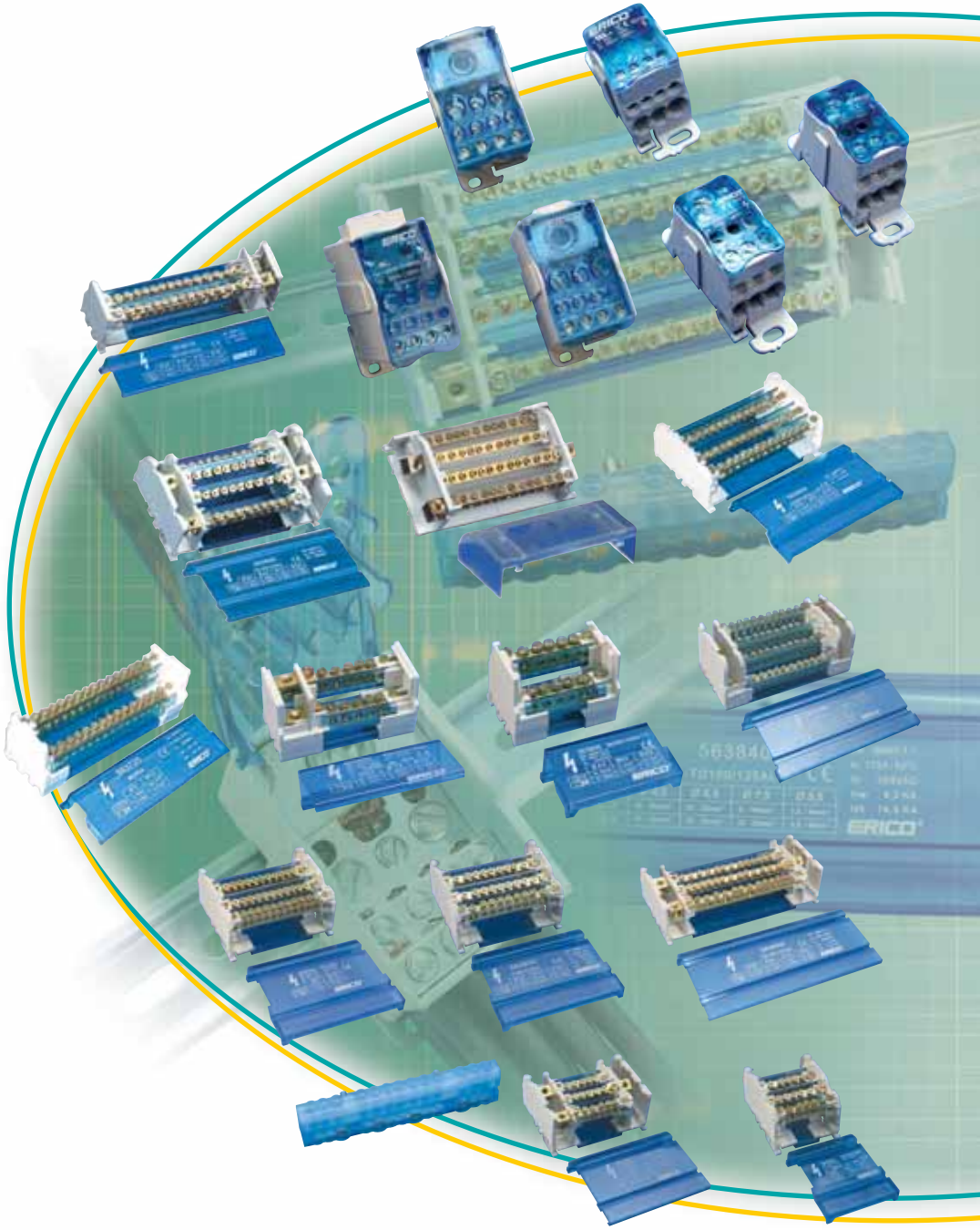

ERICO®

Single Pole Distribution Blocks



Tested and certified according to IEC 60947-7-1

UL® recognized for US and Canada (single pole only)
– UL 1059 - VO
– CSA® C22.2 NO. 158

4-5 SINGLE POLE DISTRIBUTION BLOCKS

6-7 TWO AND FOUR POLE DISTRIBUTION BLOCKS

UNITED KINGDOM
52 Milford Road
Reading, Berkshire RG1 8LJ
United Kingdom
Phone 00 800 5000 1090
Fax 00 800 6000 1090

OTHER COUNTRIES
B.P. 31 - 42161 Andrézieux Cedex
Phone 00 33 477 36 56 56
Fax 00 33 477 36 18 10

NORTH AMERICA
34600 Solon Road
Solon, Ohio 44139
United States of America
Phone 1-800-497-4304
Fax 1-800-944-4296

Multi Pole Distribution Blocks

NEW

End large terminal = true capacity

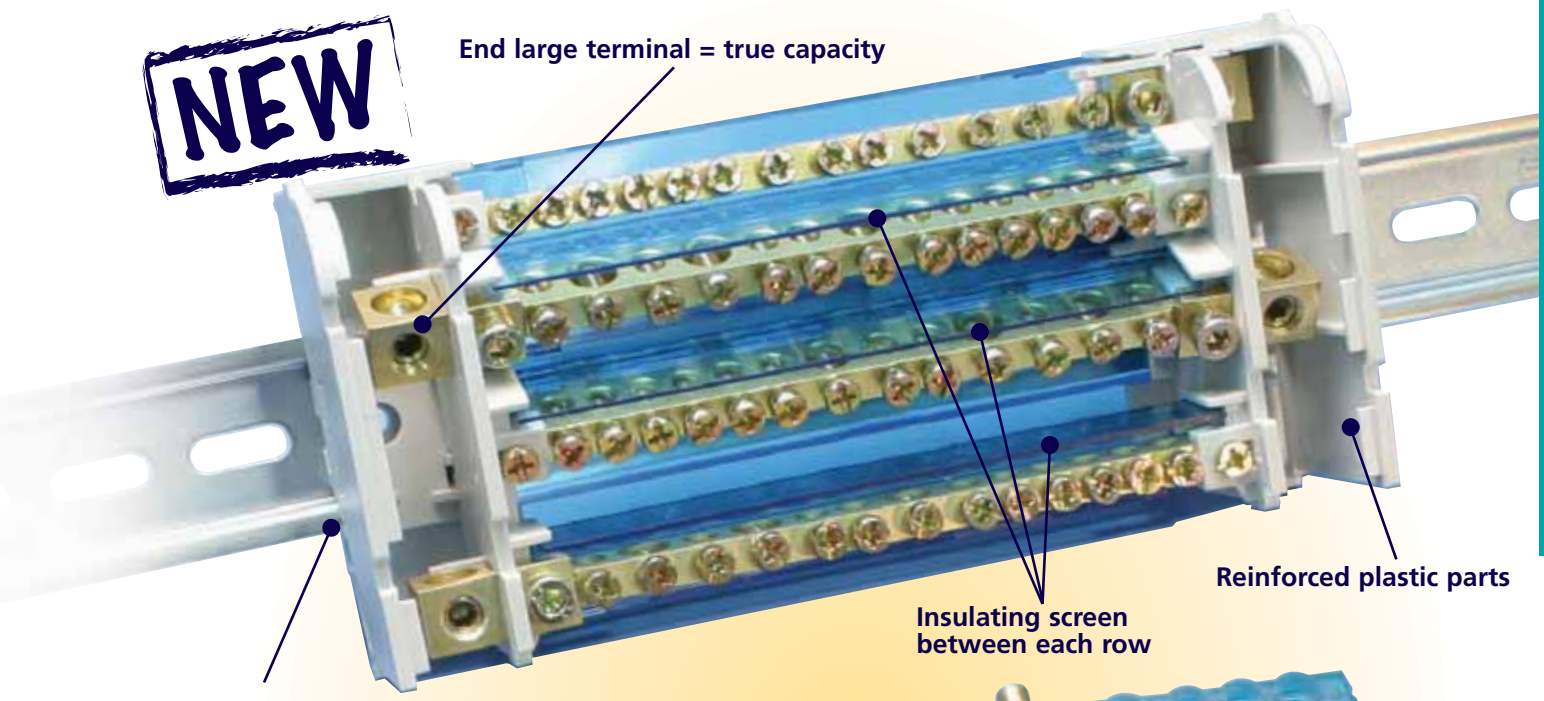

Reinforced plastic parts

Insulating screen
between each row

Easy clip-in fixing

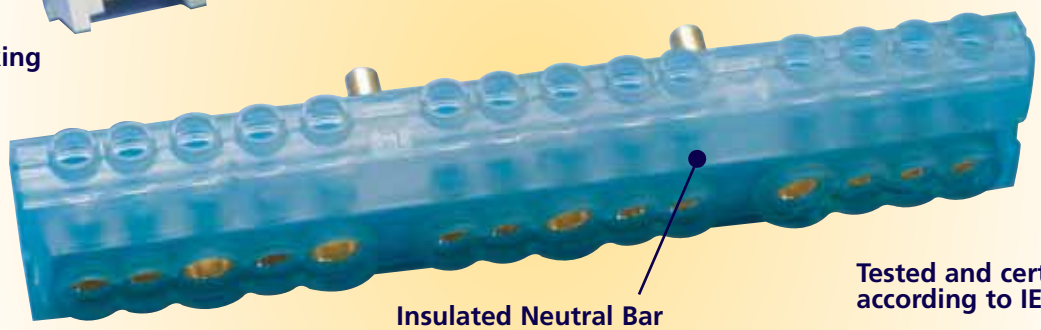

Tested and certified
according to IEC 60947-7-1

Insulated Neutral Bar
giving numerous connections

Cover = safe connections

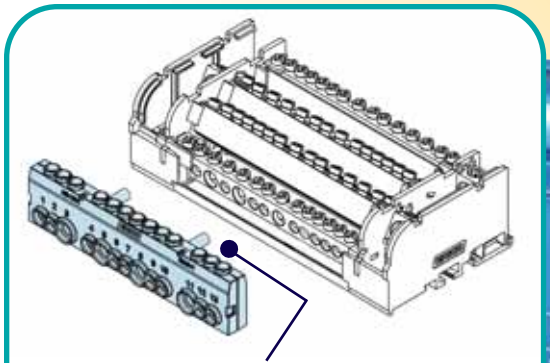

Mechanical fixing
& electrical connection

WARNING
ERICO products shall be installed and used only as indicated in ERICO's product instruction sheets and training materials. Instruction sheets are available at www.erico.com and from your ERICO customer service representative. Improper installation, misuse, misapplication or other failure to completely follow ERICO's instructions and warnings may cause product malfunction, property damage, serious bodily injury and death.

WARRANTY
ERICO products are warranted to be free from defects in material and workmanship at the time of shipment. NO OTHER WARRANTY, WHETHER EXPRESS OR IMPLIED (INCLUDING ANY WARRANTY OF MERCHANTABILITY OR FITNESS FOR A PARTICULAR PURPOSE), SHALL EXIST IN CONNECTION WITH THE SALE OR USE OF ANY ERICO PRODUCTS. Claims for errors, shortages, defects or nonconformities ascertainable upon inspection must be made in writing within 5 days after Buyer's receipt of products. All other claims must be made in writing to ERICO within 6 months from the date of shipment or transport. Products claimed to be nonconforming or defective must, upon ERICO's prior written approval in accordance with its standard terms and procedures governing returns, promptly be returned to ERICO for inspection. Claims not made as provided above and within the applicable time period will be barred. ERICO shall in no event be responsible if the products have not been stored or used in accordance with its specifications and recommended procedures. ERICO will, at its option, either repair or replace nonconforming or defective products for which it is responsible or return the purchase price to the Buyer. THE FOREGOING STATES BUYER'S EXCLUSIVE REMEDY FOR ANY BREACH OF ERICO WARRANTY AND FOR ANY CLAIM, WHETHER SOUNDING IN CONTRACT, TORT OR NEGLIGENCE, FOR LOSS OR INJURY CAUSED BY THE SALE OR USE OF ANY PRODUCT.

LIMITATION OF LIABILITY
ERICO excludes all liability except such liability that is directly attributable to the willful or gross negligence of ERICO's employees. Should ERICO be held liable its liability shall in no event exceed the total purchase price under the contract. ERICO SHALL IN NO EVENT BE RESPONSIBLE FOR ANY LOSS OF BUSINESS OR PROFITS, DOWNTIME OR DELAY, LABOR, REPAIR OR MATERIAL COSTS OR ANY SIMILAR OR DISSIMILAR CONSEQUENTIAL LOSS OR DAMAGE INCURRED BY BUYER.

Single Pole Distribution Blocks

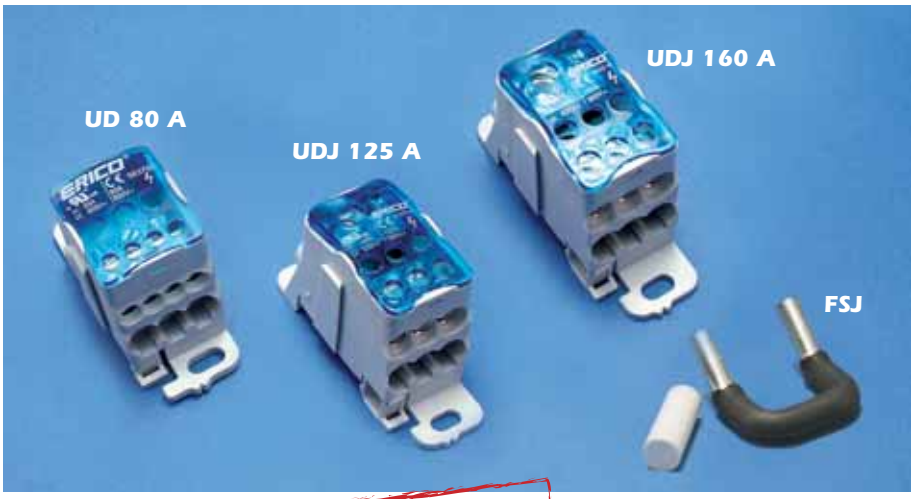

- Visual inspection of wire and confirmation of connection
- Halogen Free
- IP 20 finger safe
- 95% fill ratio
- self extinguishing plastic v0
- tinned copper blocks
- electrical connection between two or more blocks, using jumper (UDJ 125 A & UDJ 160 A)

IEC 60947-7-1 UL-1059

UD 80 A
80 A - IEC
85 Amp - c UL us

- Modular: keeping only one input, the blocks can be supplied in parallel using a jumper wire. Easily double the neutral.

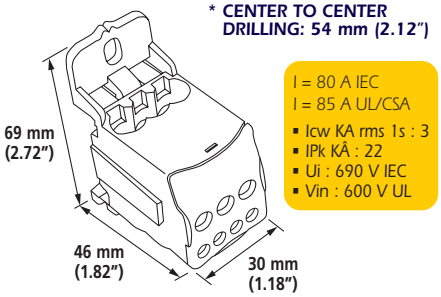

METRIC	mm²			Γ(N.m)
	6…16	x1		2,2
	2,5…6	x4		1,2
	2,5…16	x2		2,2

IMPERIAL	AWG			Torque Inch/Lbs.
	16…4	x1		19.5
	16…8	x4		10.6
	16…4	x2		19.5

Part No.	DESCRIPTION		kg/lbs
569010	UD 80 A	1	0,07/0.15

UDJ 125 A
125 A - IEC
150 Amp - c UL us

- Modular: keeping only one input, the blocks can be supplied in parallel using a jumper. Easily double the neutral.

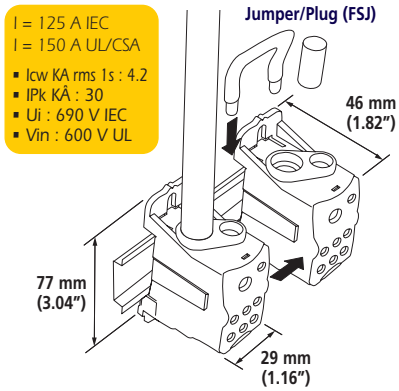

* CENTER TO CENTER DRILLING: 64 mm (2.53")

METRIC	mm²			Γ(N.m)
	10…35	x1		6,4
	6…16**	x1		3,5
	2,5…16	x6 x4		3,5

** or common jumper

IMPERIAL	AWG			Torque Inch/Lbs.
	8…1/0	x1		57
	14…2	x1		31
	14…4	x6		31

Part No.	DESCRIPTION		kg/lbs
569020	UDJ 125 A	1	0,15/0.33
569150	FSJ	25	0,03/0.07

UDJ 160 A
160 A - IEC
200 Amp - c UL us

- Modular: keeping only one input, the blocks can be supplied in parallel using a jumper. Easily double the neutral.

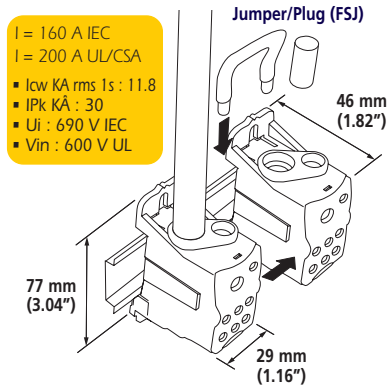

* CENTER TO CENTER DRILLING: 64 mm (2.53")

METRIC	mm²			Γ(N.m)
	10…70	x1		8,5
	6…16**	x1		3,5
	2,5…16	x6 x4		3,5

** or common jumper

IMPERIAL	AWG			Torque Inch/Lbs.
	8…3/0	x1		75
	14…2	x1		31
	14…4	x6		31

Part No.	DESCRIPTION		kg/lbs
569030	UDJ 160 A	1	0,15/0.32
569150	FSJ	25	0,03/0.07

Single Pole Distribution Blocks

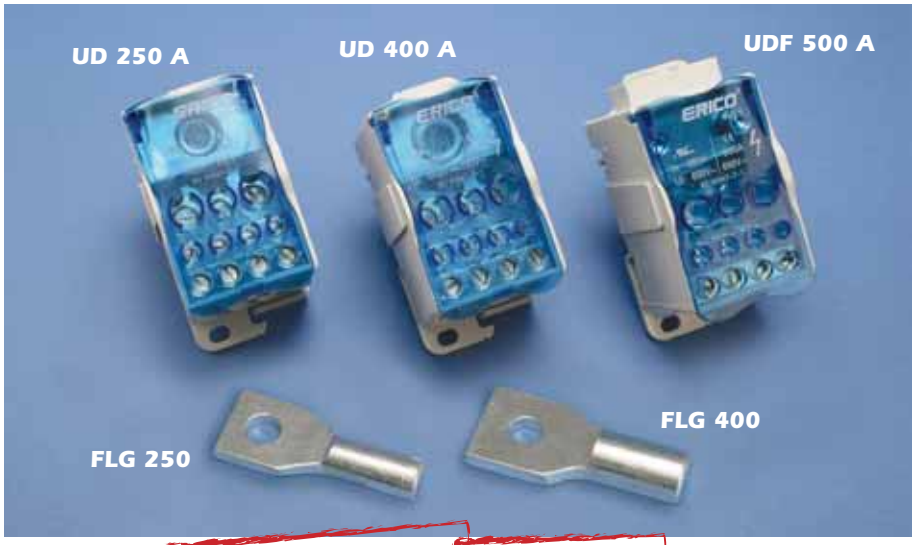

- ERIFLEX® FLEXIBAR direct connection on input (UDF 500 A)
- ERIFLEX FLEXIBAR connection at input, using flag terminals (FLG 250 A & FLG 400 A)

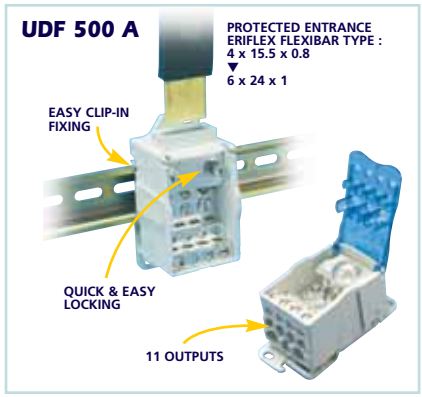

IEC 60947-7-1 UL-1059

UD 250 A
250 A - IEC
255 Amp - c UL us

- Modular: allows versatile building of power blocks single pole, two pole, three pole or four pole.

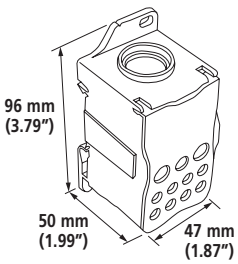

DIRECT FLG 250:
WITH ERIFLEX FLEXIBAR

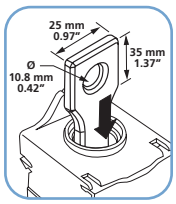

Direct link between the block and a switch

I = 250 A IEC
I = 255 A UL/CSA
- Icw KA rms 1s : 24.5
- IPk KÂ : 51
- Ui : 690 V
- Vin : 600 V UL

CENTER TO CENTER DRILLING: 85 X 29 mm (3.35" x 1.14")

METRIC	mm²	mm²			Γ(N.m)
	35...120		x1		19
	6...35	6...25	x2		4,4
	2,5...16	2,5...16	x5		2.7
	2,5...10	2,5...10	x4		2.7

IMPEDIAL	AWG			Torque Inch/Lbs.
	6...250 Kcmil	x1		168
	14...1	x2		39
	14...4	x5		24
	14...6	x4		24

Part No.	DESCRIPTION		kg/lbs
569040	UD 250 A	1	0,42/0.89
569160	FLG 250	10	0,05/0.12

UD 400 A
400 A - IEC
335 Amp - c UL us

- Modular: allows versatile building of power blocks single pole, two pole, three pole or four pole.

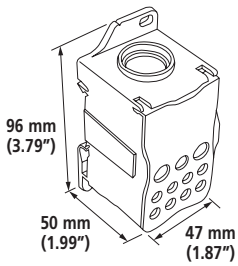

DIRECT FLG 400:
WITH ERIFLEX FLEXIBAR

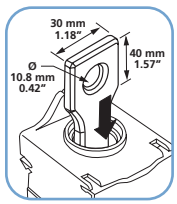

Direct link between the block and a switch

I = 400 A IEC
I = 335 A UL/CSA
- Icw KA rms 1s : 24.5
- IPk KÂ : 51
- Ui : 690 V
- Vin : 600 V UL

CENTER TO CENTER DRILLING: 85 X 29 mm (3.35" x 1.14")

METRIC	mm²	mm²			Γ(N.m)
	95...185		x1		25
	6...35	6...25	x2		4,4
	2,5...16	2,5...16	x5		2,7
	2,5...10	2,5...10	x4		2,7

IMPEDIAL	AWG			Torque Inch/Lbs.
	3/0...400 Kcmil	x1		221
	14...1	x2		39
	14...4	x5		24
	14...6	x4		24

Part No.	DESCRIPTION		kg/lbs
569050	UD 400 A	1	0,4/0.89
569170	FLG 400	10	0,1/0.21

UDF 250 → 500 A
500 A - IEC
520 Amp - c UL us Pending

- **DIRECT CONNECTION WITH ERIFLEX FLEXIBAR.**
- Modular: allows versatile building of power blocks single pole, two pole, three pole or four pole.

ERIFLEX® FLEXIBAR
4 x 15,5 x 0, 8
6 x 15,5 x 0,8
2 x 20 x 1
3 x 20 x 1
4 x 20 x 1
5 x 20 x 1
6 x 20 x 1
2 x 24 x 1
3 x 24 x 1
4 x 24 x 1
5 x 24 x 1
6 x 24 x 1

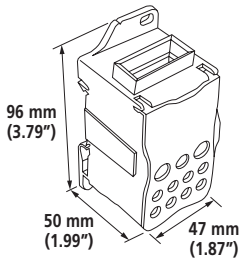

I = 500 A IEC
I = 520 A UL/CSA
- Icw KA rms 1s : 24.5
- IPk KÂ : 51
- Ui : 690 V
- Vin : 600 V UL

CENTER TO CENTER DRILLING: 85 X 29 mm (3.35" x 1.14")

METRIC	mm²	mm²			Γ(N.m)
	4x15, 5x0.8, 6x24x1	4x15, 5x0.8, 6x24x1			10
	6...35	6...25	x2		4,4
	2,5...16	2,5...16	x5		2,7
	2,5...10	2,5...10	x4		2,7

IMPEDIAL	AWG			Torque Inch/Lbs.
	4x15, 5x0.8, 6x24x1			88.5
	14...1	x2		39
	14...4	x5		24
	14...6	x4		24

Part No.	DESCRIPTION		kg/lbs
569060	UDF 500 A	1	0,37/0.83

Two and Four Pole Distribution Blocks

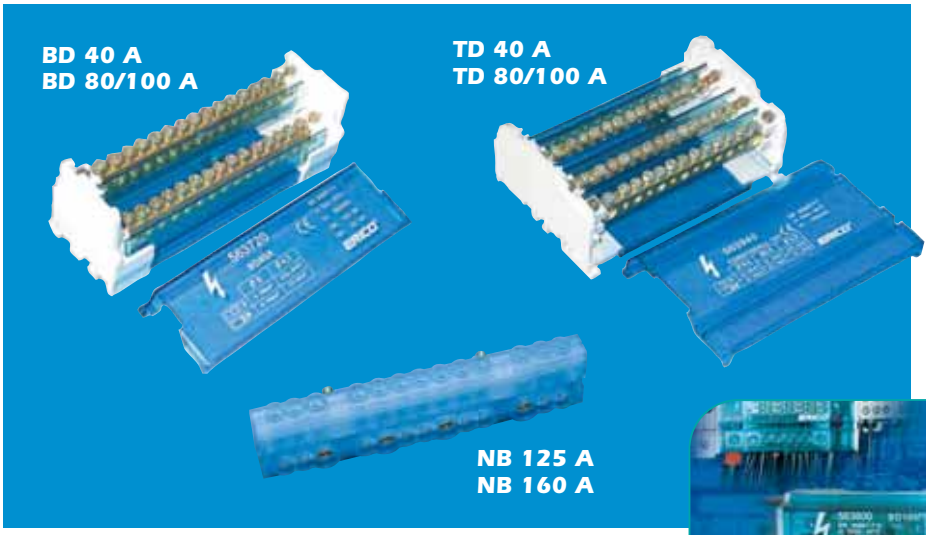

- Minimum space for maximum power
- Easy connections
- Protection: Transparent cover and screen
- Self extinguishing VO
- Safe connections
- Rail or screw Mounting*
- Wiring with or without terminal



IEC 60947-7-1

2 & 4 POLE 40 A

2 pole BD 40 A

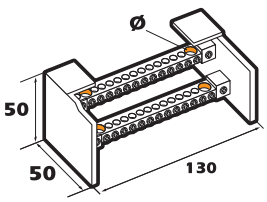

- Icw kA rms 1s : 4.5
- IPk kÂ : 22
- Ui : 500 V

BD 40 A - 16 OUTPUTS

	mm²	mm²		Ø		
	6 - 16	4 - 10	x2	6		2-3
	1,5 - 4	0,75 - 4	x15	4,3		1,2-1,5

4 pole TD 40 A

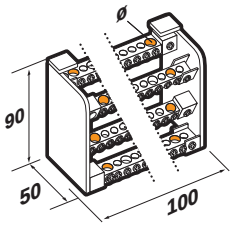

- Icw kA rms 1s : 4.5
- IPk kÂ : 22
- Ui : 500 V

TD 40 A - 12 OUTPUTS

	mm²	mm²		Ø		
	6 - 16	4 - 10	x2	6		2-3
	1,5 - 4	0,75 - 4	x11	4,3		1,2-1,5

* Center to drilling :
- BD 40 A = 110 mm
- TD 40 A = 80 mm

Part No.	DESCRIPTION		
563720	BD 40 A	1	0,22
563740	TD 40 A	1	0,33

2 & 4 POLE 80/100 A

2 pole BD 80/100 A

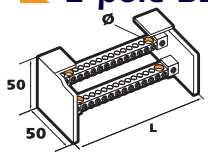

- Icw kA rms 1s : 4.5
- IPk kÂ : 20
- Ui : 500 V

BD 80/100 A - 6 TERMINALS

	mm²	mm²		Ø		Γ(N.m)
	10…35	10…25	x1	8,5		2-3
	1,5…4	0,75…4	x3	4,5		1,2-1,5
	2,5…6	1,5…6	x3	5,5		2-3

BD 80/100 AL - 14 TERMINALS

	10…35	10…25	x2	8,5		2-3
	1,5…4	0,75…4	x6	4,5		1,2-1,5
	2,5…6	1,5…6	x7	5,5		2-3

4 pole TD 80/100 A

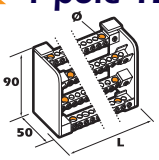

- Icw kA rms 1s : 4.5
- IPk kÂ : 20
- Ui : 500 V

TD 80/100 A - 6 TERMINALS

	mm²	mm²		Ø		Γ(N.m)
	10…35	10…25	x1	8,5		2-3
	1,5…4	0,75…4	x3	4,5		1,2-1,5
	2,5…6	1,5…6	x3	5,5		2-3

TD 80/100 AL - 10 TERMINALS

	10…35	10…25	x2	8,5		2-3
	1,5…4	0,75…4	x4	4,5		1,2-1,5
	2,5…6	1,5…6	x5	5,5		2-3

TD 80/100 ALL - 14 TERMINALS

	10…35	10…25	x2	8,5		2-3
	1,5…4	0,75…4	x6	4,5		1,2-1,5
	2,5…6	1,5…6	x7	5,5		2-3

* Center to drilling :
- BD 80/100 A = 45 mm
- BD 80/100 AL = 110 mm
- TD 80/100 A = 45 mm
- TD 80/100 AL = 80 mm
- TD 80/100 ALL = 110 mm

Part No.	DESCRIPTION			L
563900	BD 80/100 A	1	0,11	64
563910	BD 80/100 AL	1	0,21	130
563920	TD 80/100 A	1	0,21	64
563930	TD 80/100 AL	1	0,31	100
563940	TD 80/100 ALL	1	0,40	130

NEUTRAL BARS

- Improved wiring capacity
- Direct electrical connection
- Strong mechanical assembly
- Transparent cover

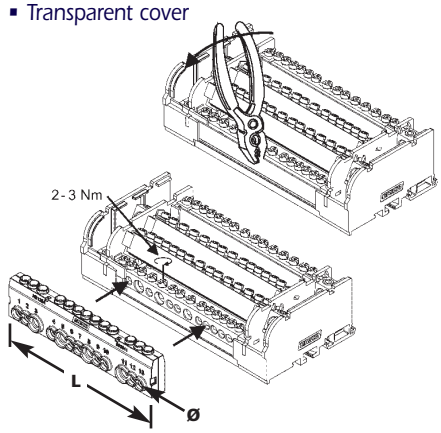

Neutral Bar 563841 → 563830 563840

Neutral Bar 563201 → 563200 563990

Available September 2006

NB 125 A

	mm²	mm²		Ø		Γ(N.m)
	10-25	6-16	x3	7,5		2-3
	2,5-6	1,5-6	x9	5,5		2-3

NB 160 A

	mm²	mm²		Ø		Γ(N.m)
	10-35	2,5-16	x4	8,5		2-3
	10-25	1,5-16	x10	7,2		2-3

Part No.	DESCRIPTION	L mm		
563841	NB 125 A	142	10	0,17
563201	NB 160 A	170	10	0,20

Two and Four Pole Distribution Blocks

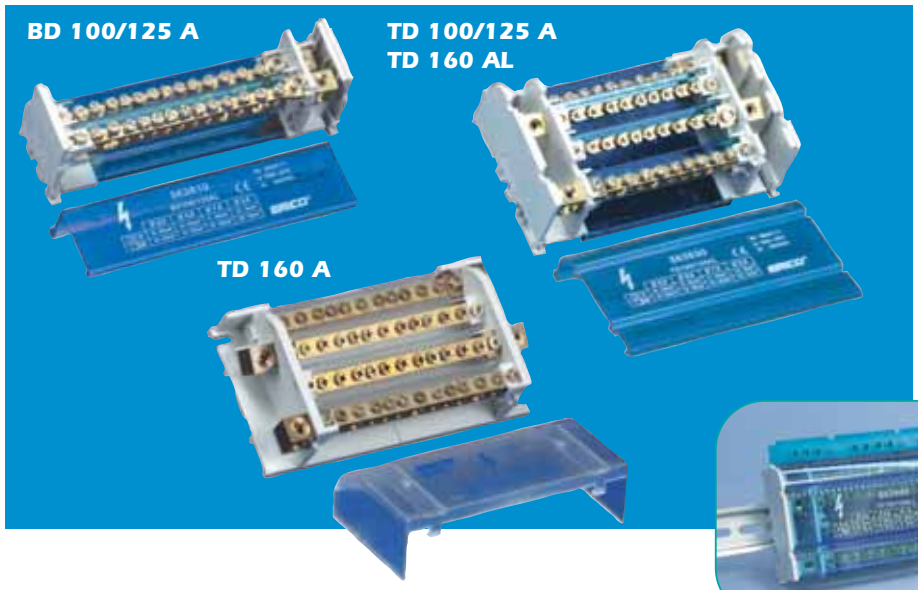

- Easy connections: Input separated from outputs
- Neutral bar
- Rail or screw mounting*

IEC 60947-7-1

2 & 4 POLE 100/125 A

2 pole BD 100/125 A

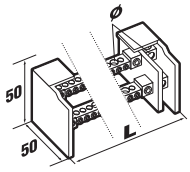

BD 100/125 A - 6 TERMINALS

	mm²	mm²		Ø		Γ(N.m)
	10…35	10…35	x1	9,5		6-7
	2,5…6	1,5…6	x5	5,5		2-3
	10…25	6…16	x1	7,5		2-3

BD 100/125 AL - 14 TERMINALS

	10…35	10…35	x1	9,5		6-7
	2,5…6	1,5…6	x11	5,5		2-3
	10…25	6…16	x3	7,5		2-3

4 pole TD 100/125 A

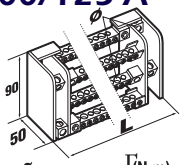

TD 100/125 A - 6 TERMINALS

	mm²	mm²		Ø		Γ(N.m)
	10…35	10…35	x1	9,5		6-7
	2,5…6	1,5…6	x5	5,5		2-3
	10…25	6…16	x1	7,5		2-3

TD 100/125 AL - 10 TERMINALS

	10…35	10…35	x1	9,5		6-7
	2,5…6	1,5…6	x7	5,5		2-3
	10…25	6…16	x3	7,5		2-3

TD 100/125 ALL - 14 TERMINALS

	10…35	10…35	x1	9,5		6-7
	2,5…6	1,5…6	x11	5,5		2-3
	10…25	6…16	x1	7,5		2-3
	10…35	10…25	x2	8,5		2-3

* Center to drilling :
- BD 100/125 A = 74 mm
- BD 100/125 AL = 142 mm
- TD 100/125 A = 89 mm
- TD 100/125 AL = 127 mm
- TD 100/125 ALL = 162 mm

- Ui = 500V

Part No.	DESCRIPTION	Icw	Ipk			L
563800	BD 100/125 A	4,5	20	1	0,16	94
563810	BD 100/125 AL	4,5	18	1	0,27	162
563820	TD 100/125 A	4,5	20	1	0,33	109
563830	TD 100/125 AL	4,5	20	1	0,44	147
563840	TD 100/125 ALL	4,2	14,5	1	0,55	182

4 POLE 160 A

TD 160 A

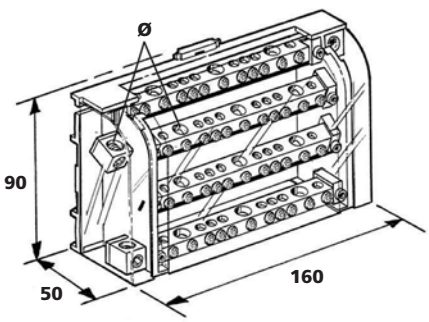

- Icw KA rms 1s : 6,2
- IPk KÂ : 20,2
- Ui : 500 V

TD 160 A : 11 TERMINALS

	mm²	mm²		Ø		Γ(N.m)
	10…50	10…35	x1	11		2
	10…35	10…25	x3	8,5		1,5
	2,5…16	1,5…16	x8	6,4		1,5

* Center to center drilling : 144.5 x 72 mm

Part No.	DESCRIPTION		
563200	TD 160 A	1	0,606

4 POLE 160 A

TD 160 AL

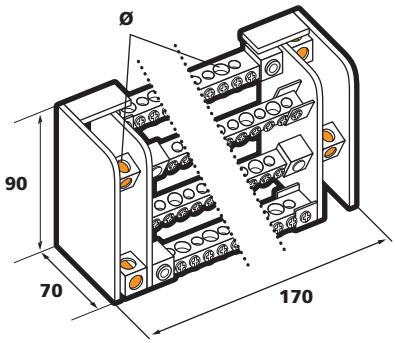

- Icw KA rms 1s : 6
- IPk KÂ : 22
- Ui : 500 V

TD 160 AL - 11 TERMINALS

	mm²	mm²		Ø		Γ(N.m)
	10…50	10…50	x1	12		8-10
	10…35	10…25	x3	8,5		2-3
	2,5…16	1,5…16	x8	7		2-3

* Center to drilling : 150 mm.

Part No.	DESCRIPTION		
563990	TD 160 AL	1	0,74

ERICO®



www.erico.com



AUSTRALIA
6 Chilvers Road
P.O. Box 148
Thornleigh (Sydney) NSW 2120
Australia
Phone 61-2-9479-8500
Fax 61-2-9484-9188



GERMANY
66851 Schwanenmühle
Germany
Phone 49-6307-918-10
Fax 49-6307-918-150



POLAND
ul. Krzemieniecka 17
54-613 Wroclaw
Poland
Phone 48-71-374-40-22
Fax 48-71-374-40-43



BELGIUM
Postbus 33
3110 Rotselaar
Belgium
Phone 32-14-69-96-88
Fax 32-14-69-96-90



HONG KONG
Unit 1, 2nd Floor, Block A
Po Yip Building
62-70 Texaco Road
Tsuen Wan, New Territories
Hong Kong
Phone 852-2764-8808
Fax 852-2764-4486



SINGAPORE
Jurong Industrial Estate
16 Wan Lee Road
Singapore 627 946
Phone 65-6-268-3433
Fax 65-6-268-1389



BRAZIL
R. Dom Pedro Henrique de Orleans
E Braganca, 276
Vila Jaguara
São Paulo CEP 05117-000
Brazil
Phone 55-11-3621-4111
Fax 55-11-3621-4066



HUNGARY
P.f. 184
1476 Budapest
Hungary
Phone 31-13-58-34-547
Fax 31-13-58-35-499



SPAIN
C/Provenza 288, Pral.
08008 Barcelona
Spain
Phone 34-93-467-7726
Fax 34-93-467-7725



CANADA
P.O. Box 170
Mississauga, Ontario
Canada L5M 2B8
Phone 1-800-677-9089
Fax 1-800-677-8131



INDONESIA
Sudirman Square Tower B 19th Fl.
Jalan Jend. Sudirman Kav. 45-46
Jakarta 12930
Indonesia
Phone 62-21-575-0941
Fax 62-21-575-0942



SWEDEN
Box 211
201 22 Malmö
Sweden
Phone 46-40-611-13-60
Fax 46-40-611-94-15

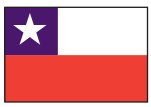

CHILE
Alcantara 200, piso 6 Of. 17
Las Condes, Santiago
Chile
Phone 56-2-370-2908
Fax 56-2-370-2914



ITALY
A&B Business Center
Via Valla 16, nr. 17
20141 Milano
Italy
Phone 39-02-8474-2250
Fax 39-02-8474-2251



SWITZERLAND
Postfach 54
3280 Murten
Switzerland
Phone 00-800-5000-1090
Fax 00-800-6000-1090

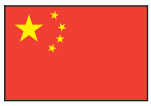

CHINA
Room 1204
Tomson Commercial Building
No. 710 Dongfang Road
Pudong, Shanghai
P.R. China 200122
Phone 86-21-5081-3900
Fax 86-21-5831-8177



MEXICO
Melchor Ocampo 193
Torre A piso 13
Col. Veronica Anzures
11300 Mexico D.F.
Mexico
Phone 52-55-5260-5991
Fax 52-55-5260-3310



THAILAND
163 Ocean Insurance Bldg.
16th Fl. Unit B
Surawongse Road
Bangrak Bangkok 10500
Thailand
Phone 66-2-634-1692
Fax 66-2-634-1694



DENMARK
Box 211
201 22 Malmö
Sweden
Phone 46-40-611-13-60
Fax 46-40-611-94-15



NETHERLANDS
Jules Verneweg 75
5015 BG Tilburg
Netherlands
Phone 31-13-58-35-400
Fax 31-13-58-35-499



UNITED KINGDOM
52 Milford Road
Reading, Berkshire RG1 8LJ
United Kingdom
Phone 44-118-958-8386
Fax 44-118-955-0925

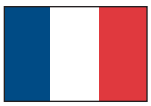

FRANCE
Rue Benoît Fourneyron Z.I. Sud
Boîte Postale 31
42161 Andrezieux Cedex
France
Phone 33-4-77-36-56-56
Fax 33-4-77-55-37-89



NORWAY
Postboks 148
1366 Lysaker
Norway
Phone 47-67-53-12-00
Fax 47-67-12-42-68



UNITED STATES
34600 Solon Road
Solon, Ohio 44139
U.S.A.
Phone 1-440-248-0100
Fax 1-440-248-0723

IEC is a service mark of the Independent Electrical Contractors, Inc.
The UL Recognized Component Mark is a registered trademark of Underwriters Laboratories, Inc.
UL is a registered trademark of Underwriters Laboratories, Inc.

Copyright ©2006 ERICO International Corporation. All rights reserved.
CADDY, CADWELD, CRITEC, ERICO, ERIFLEX, ERITECH, and LENTON are registered trademarks of ERICO International Corporation.

P502C-EN P700LT04EUEN 0032.75M6