Single Pole Distribution Blocks

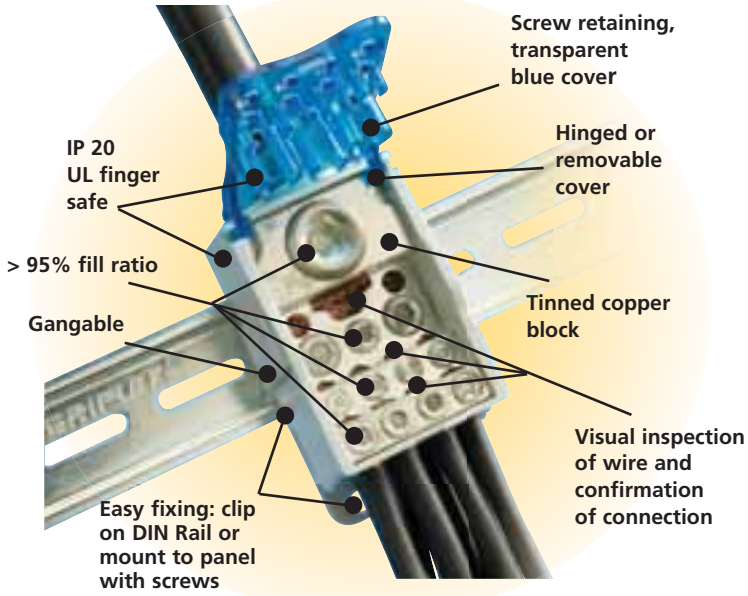

Compact

- UL® recognized for US and Canada (single pole only)
  – UL 1059
  – CSA® C22.2 NO. 158
- Tested and certified according to IEC 60947-7-1
- Short Circuit Current Rated up to 100 KA - See UL file E198301
- Halogen-free
- UL 94V-0

Power Blocks

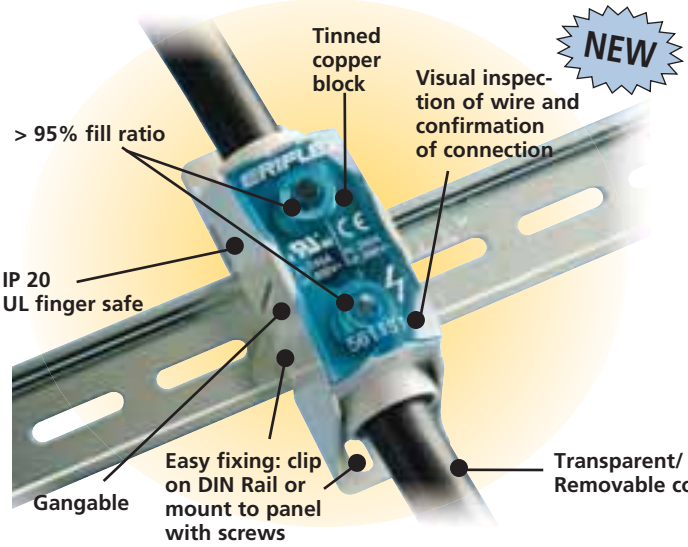



- Tested and Certified according to IEC 60947-7-1 Ui=690V
- UL recognized for US & Canada
- UL 1059 Ui=600V
- Short Circuit Current Rated up to 100 KA
- Halogen Free
- UL94 V-0
- RoHS Compliant

Power Terminals

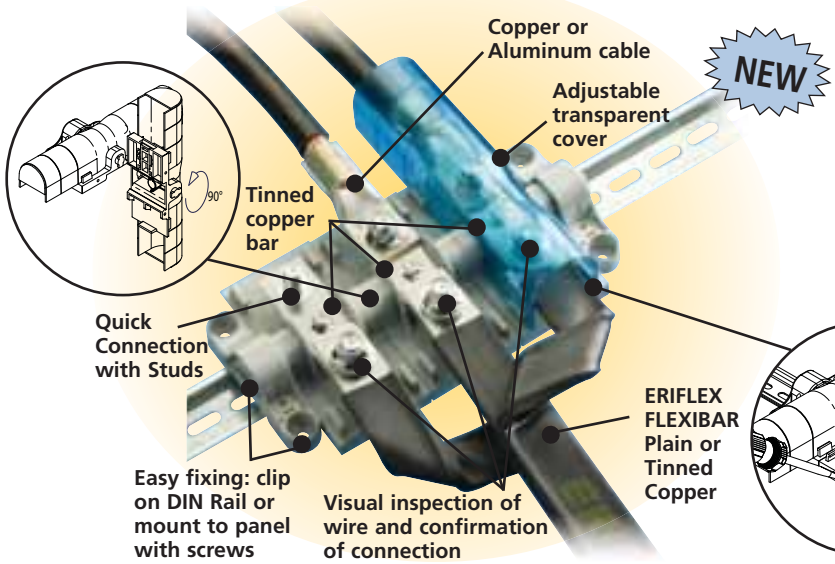



Single Pole Distribution Blocks

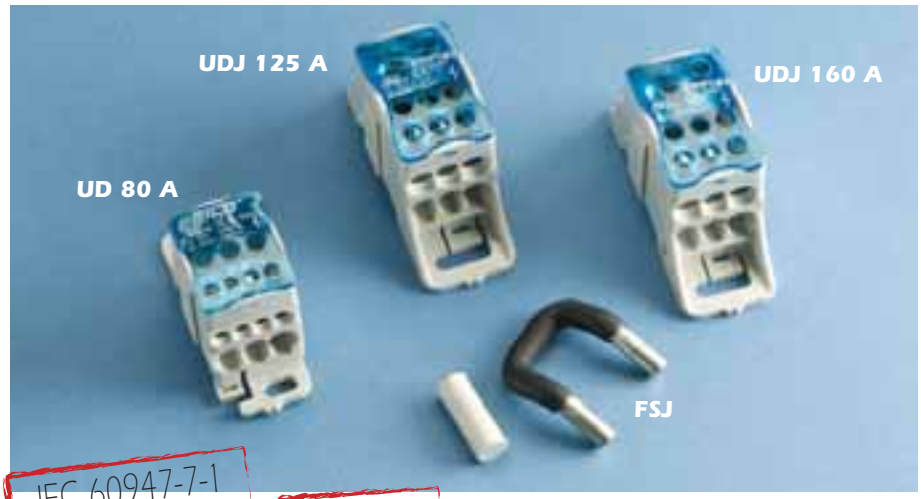

- Visual inspection of wire and confirmation of connection
- Halogen-free
- IP 20 finger safe
- 95% fill ratio
- Self extinguishing: UL94 V-0
- Tinned copper blocks: Copper or Aluminum Cable
- Short circuit current rated up to 100 KA - See UL file E198301
- RoHS Compliant

UD 80 A
80 A - IEC
85 Amp - c UL us

- Modular: keeping only one input, the blocks can be supplied in parallel using a jumper wire. Easily double the neutral.

I = 80 A IEC
I = 85 A UL/CSA

- Icw KA rms 1s : 3
- IPk KÂ : 22
- Ui : 690 V AC/DC IEC
- Vin : 600 V UL

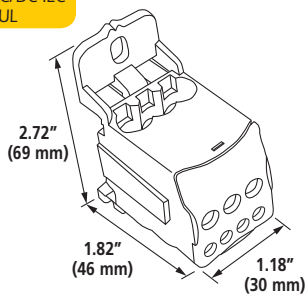

* CENTER TO CENTER DRILLING: 2.12" (54 mm)

METRIC	mm²			Γ(N.m)
	6...16	x1	V	3,5
	2,5...6	x4	V	1,2
	2,5...16	x2	V	3,5

IMPERIAL	AWG			Torque inch/Lbs.
	16...4	x1	V	19.5
	16...8	x4	V	10.6
	16...4	x2	V	19.5

Part No.	DESCRIPTION		kg/lbs
569010	UD 80 A	1	0,07/0.15

UDJ 125 A
125 A - IEC
150 Amp - c UL us

- Modular: keeping only one input, the blocks can be supplied in parallel using a jumper. Easily double the neutral.

I = 125 A IEC
I = 150 A UL/CSA

- Icw KA rms 1s : 4.2
- IPk KÂ : 30
- Ui : 690 V AC/DC IEC
- Vin : 600 V UL

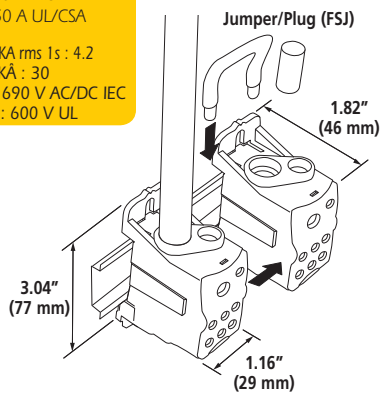

* CENTER TO CENTER DRILLING: 2.53" (64 mm)

METRIC	mm²			Γ(N.m)
	10...35	x1		8,5
	6...16**	x1		3,5
	2,5...16	x4 x6		3,5

** or common jumper

IMPERIAL	AWG			Torque inch/Lbs.
	8...1/0	x1		57
	14...4	x1		31
	14...4	x6		31

Part No.	DESCRIPTION		kg/lbs
569020	UDJ 160 A	1	0,15/0.33
569150	FSJ	25	0,03/0.07

UDJ 160 A
160 A - IEC
200 Amp - c UL us

- Modular: keeping only one input, the blocks can be supplied in parallel using a jumper. Easily double the neutral.

I = 160 A IEC
I = 200 A UL/CSA

- Icw KA rms 1s : 11.8
- IPk KÂ : 30
- Ui : 690 V AC/DC IEC
- Vin : 600 V UL

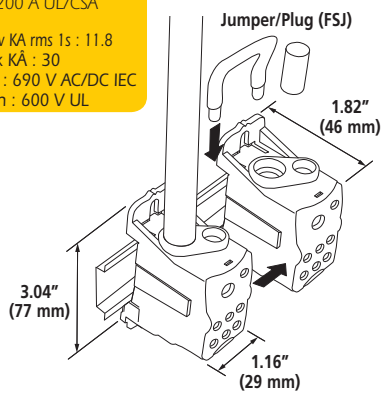

* CENTER TO CENTER DRILLING: 2.53" (64 mm)

METRIC	mm²			Γ(N.m)
	10...70	x1		8,5
	6...16**	x1		3,5
	2,5...16	x4 x6		3,5

** or common jumper

IMPERIAL	AWG			Torque inch/Lbs.
	8...3/0	x1		75
	14...4	x1		31
	14...4	x6		31

Part No.	DESCRIPTION		kg/lbs
569030	UDJ 160 A	1	0,15/0.32
569150	FSJ	25	0,03/0.07