Irrigation

Polymer Concrete

H-Series

H-SERIES™ Polymer Concrete has exceptional strength, rigidity along with being lighter than concrete. Our polymer concrete is a blend of graded aggregates in combination with a proprietary mix of the finest polymer resins available, we then add chopped fiberglass for increased reinforcement. Sizes range from 11”x11” to 36”x 60” with up to ASHTO H-20 performance rating.

0910 Heavy Duty Round

910 H-Series is designed to withstand H-10 and H-20 loading in incidental and non-deliberate traffic areas. Not intended to be installed in roadways. Compliant with AASHTO H-10 Design Load; ASTM C 857-95 Design Load of A-8, 8,000 lbs.

Highlights

- Prox 30% lighter than concrete
- Chip & crack resistant
- Alkaline, acid, and weather resistant
- Various lock options
- Made in USA

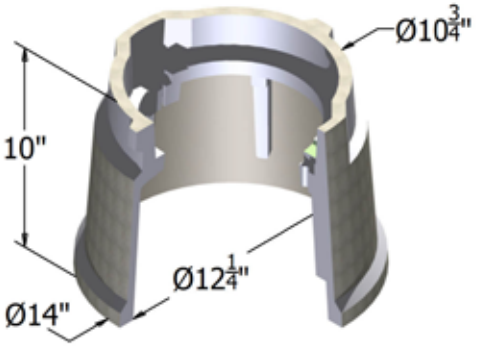

0910-10 POLYMER CONCRETE

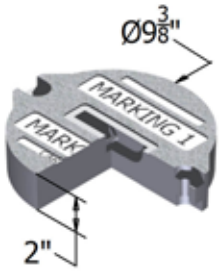

0910-FLUSH COVER POLYMER CONCRETE

Unit

0910	Depth	Color	SKU Number	Description 1	Description 2	Item Weight	Pallet Qty	Pallet Weight	Line Item Discount
Unit	10	Gray	**09101049**	910-10 PPC Gray Blank CHBlt	2x 3|8 in. FCvr H20	34.3	36	1284.0	OC03

Body

0910	Depth	Color	SKU Number	Description 1	Description 2	Item Weight	Pallet Qty	Pallet Weight	Line Item Discount
Body	10	Gray	**09102011**	910-10 PP Body Gray	2x 3|8 in. Insert	23.7	36	903.0	OC03

Cover

0910	Depth	Color	SKU Number	Description 1	Description 2	Item Weight	Pallet Qty	Pallet Weight	Line Item Discount
Cover	-----	Gray	**09104029**	910 PC Flsh Cover Blank	2x Prov	10.6	200	2050.0	OC03