Armored Cable Grounding Kit – ACG24K*, ACGK*

INSTALLATION INSTRUCTIONS T-PMPI-292-PC

© 2008 *PANDUIT* Corp.

1 **24" (.6m) Jumper**

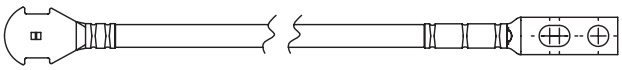

2 **Clamp**



3



4

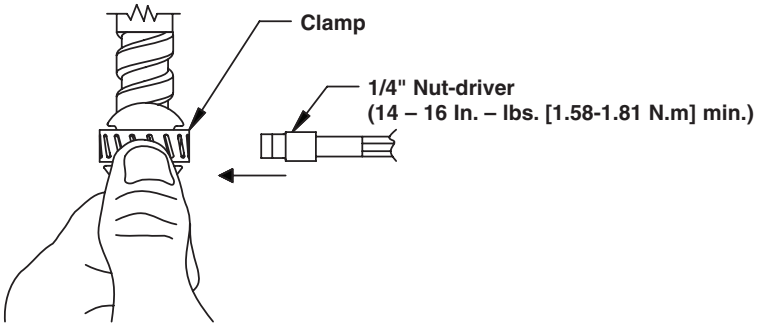

5

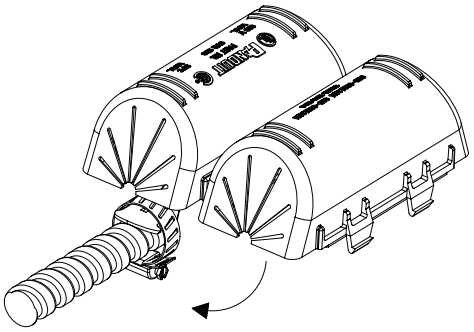

6

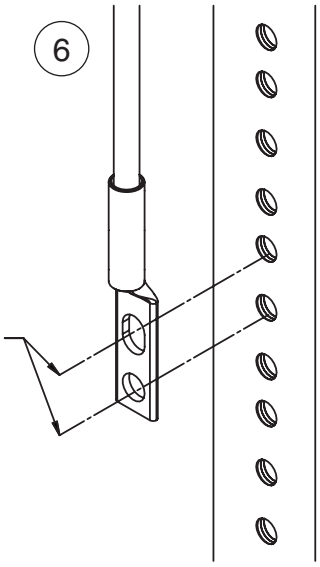

*UL, CSA listing does not apply.

For Instructions in Local Languages and Technical Support:
http://www.panduit.com/resources/install_maintain.asp

www.panduit.com

E-mail:
cs@panduit.com
Fax:
(815)485-5839