THIS COPY IS PROVIDED ON A RESTRICTED BASIS AND IS NOT TO BE USED IN ANY WAY DETRIMENTAL TO THE INTERESTS OF PANDUIT CORP.

PANDUIT PART #	STUD SIZE		DIMENSIONS in. [mm]					TOOLS
	ENGLISH	METRIC	L ± .03 [0,76]	W ± .01 [0,25]	C ± .02 [0,51]	M ± .03 [0,76]	H ± .01 [0,25]	
EV14-6FB	#6	M3	.84 [21,3]	.28 [7,11]	.19 [4,83]	.70 [17,8]	.15 [3,81]	CT-100A *CT-160 *CT-260 *CT-400 CT-600-A (CT-500CH) CT-600-A (CT-550CH) CT-1550 CT-1551 CT-2500 (CT-2550CH)
EV14-8FB	#8	M4	.90 [22,9]	.31 [7,87]	.23 [5,84]	.74 [18,8]	.17 [4,32]	
EV14-10FB	#10	M5	.92 [23,4]	.34 [8,64]	.24 [6,10]	.76 [19,3]	.20 [5,08]	

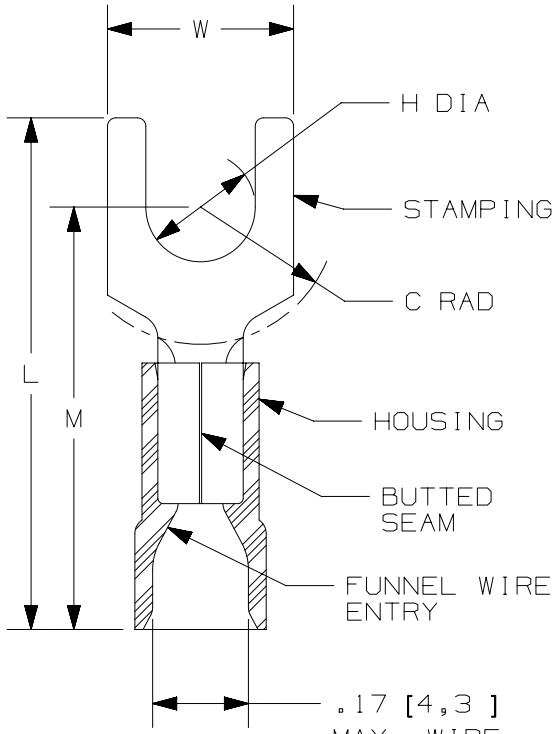

*PANDUIT APPROVED TOOL

NOTES:

1. UL LISTED AND CSA CERTIFIED FOR:
   A. 16-14 AWG [1,5-2,5 mm²] SOLID OR STRANDED COPPER WIRE
   B. 221°F [105°C] MAX. OPERATING TEMPERATURE
   C. 600V. MAX. BLDG WIRE (1000 V. MAX. IN SIGNS, FIXTURES & LUMINAIRES)
2. MATERIAL:
   A. STAMPING: .03" [0,8] THK COPPER, TIN PLATED
   B. HOUSING: VINYL, BLUE
3. WIRE STRIP LENGTH: 5/16" $^{+1/32}_{-0}$ [7,9mm $^{+0,8}_{-0}$]
4. SEE www.panduit.com FOR PACKAGE QUANTITIES
5. DIMENSIONS IN BRACKETS ARE METRIC EQUIVALENT

c UL us LISTED 587H E52164

CSA CERTIFIED LR31212

REV	DATE	BY	CHK	APR	DESCRIPTION	ECN
00	2/18	JHNU	TMR	RGB	RELEASED	00123SH

TITLE

STRONGHOLD FORK TERMINALS VINYL INSULATED, BUTTED SEAM #16-14 AWG

CUSTOMER DRAWING

ITEM REVISION NAME: 00123SH0/00

DATASET FILE NAME: 00123SH0_DC/00

UNLESS OTHERWISE SPECIFIED, DIMENSIONAL TOLERANCES ARE: IN [mm]

.X ± .XXX ±

.XX ± ANGLES ±

THIRD ANGLE PROJECTION

MATERIAL: SEE NOTES

DRAWING NUMBER: SH41193

DRAWN BY	DATE	CHK	SCALE	SHEET	SIZE
JHNU	2/18	TMR	N.T.S.	SHEET 1 OF 1	A

D10100DA/12