SUNGOLDPOWER

Reminder: PV ground and AC ground should be isolated from each other and NOT connected together!!!

16*590W BIFACIAL SOLAR PANEL

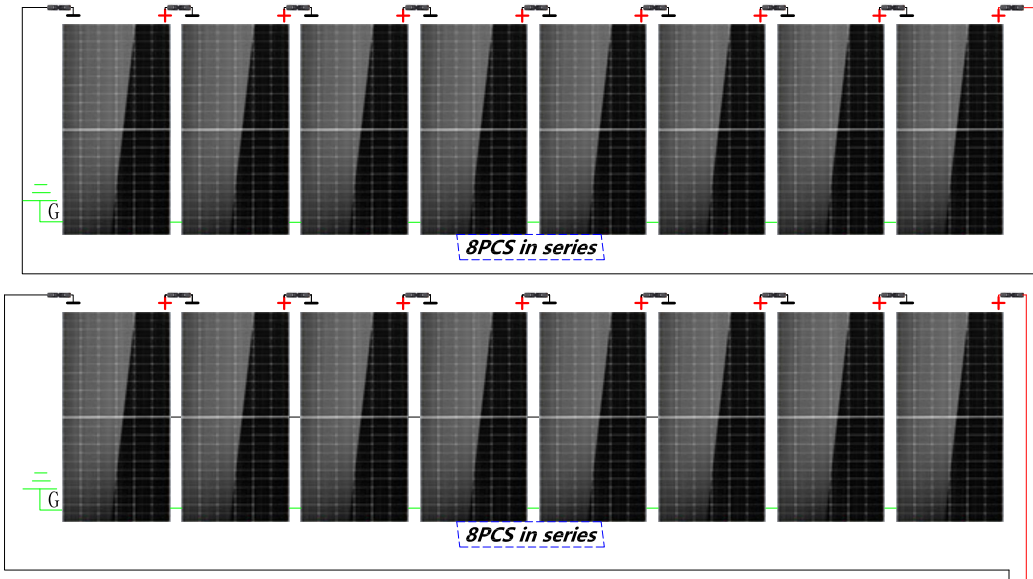

12000W 48VDC INVERTER

10AWG

AC INPUT

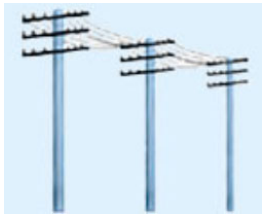

Utility

L1L2NG



HOME LOAD



25A breaker



Generator



4/0AWG

busbar 400A

4AWG

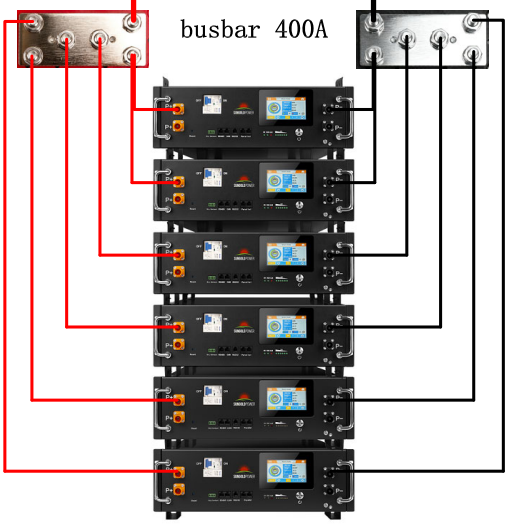

6*100AH 48V LIFEPO4 BATTERY
(*in parallel*)

OFF-GRID SOLAR KIT 12000W 48VDC 120/240VAC
30.72KWH LITHIUM BATTERY 16 X 590 WATTS SOLAR PANELS

FR-12K30CP