techoLED®
BROOKLYN • NY

BX-2P PERIMETER SERIES

Rev. Date: 11/12/2026

Project:	Type:
	Comments:



Highlights

BX-2P Perimeter linear lighting is a highly versatile and effective lighting technique that offers a wide range of benefits for both residential and commercial spaces. It's not just about illumination; it's a design tool that can dramatically change the look and feel of a room.

LED: Samsung LED chips, 2700-5000K, tunable white and RGB/W available, 90CRI

Optical: Direct illumination, 110° beam angle

Construction: High grade aluminum extrusion, die cast end caps, PMMA diffuser, integral driver, powder coat finish, X, T, L Lit corners available for smooth, seamless patterns, damp location listed.

5-year limited warranty

Cross Section

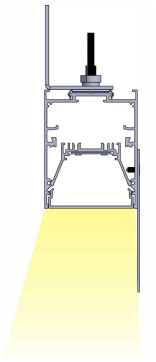

Installation

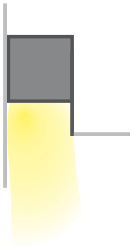

Recessed Perimeter
(RP)

techoLED®
BROOKLYN • NY

BX-2P PERIMETER SERIES

Rev. Date: 11/12/2026

Project:	Type:
	Comments:

Configuration Example

Model #	Distribution	Length	Lumen Output	Color Temp.	Voltage	Finish
TECHOLED-BX-2P-D-2-LO-27-U-W	Direct	2'	Low	2700K	110-277V	White

Ordering Guide:

Select one option from each group below. For a custom preference please contact sales@techoled.com

1-FIXTURE ID		2-DISTRIBUTION		3-LENGTH		4-LUMEN OUTPUT	
BX-2-P	BX-2-P	D	Direct	2	2´	LO	Low
		DWW	Direct-Wall Wash	4	4´	ME	Medium
				6	6´	HI	High
				8	8´		
				C	Custom		

5-COLOR TEMP.		6-VOLTAGE		7-FINISH		8-MOUNTING	
27	2700K	U	110-277V	S	Silver	PTG	Perimeter to T grid
30	3000K	HV	347V	W	White	2RPTG	2" Reg. Perimeter to T grid
35	3500K			B	Black	PF	Perimeter to flange
40	4000K			C	Custom (RAL#)	2RPF	2" Reg. Perimeter to flange
50	5000K					PMI	Perimeter to mud-in
DT	Lutron T-series					2RPMI	2" Reg. Perimeter to mud-in
RGB	RGB						
RGBW	RGBW						
D	Tunable White						

9-DRIVER OPTIONS		10-OPTIONS		11-OPTIONS (CONT.)	
DM	0-10V Dimming	RF-D	Remote Tunable (RF only)	EM	EM Battery (remote)
2C	2 Channel	RF-R	Remote RGB/W (RF only)	X	None
DM1%	1% Dimming	M	Motion Sensor (remote)		
LT1	LDE1 Lutron 1%	BM	BubblyNet BT Mesh		
DA	Dali	CS	Casambi		
DMX	DMX	AWNR	Lutron Athena Node		
TR	Triac Dimming	AWNS	Lutron Athena Node sensor		
RF	RF Wireless	NL-ES7	nLight - Wired		
X	None	NL-AIR	nLight - AIR		
		NL-M	nLight - Module only		
		X	None		

techoLED®
BROOKLYN • NY

BX-2P PERIMETER SERIES

Rev. Date: 11/12/2026

Project:	Type:
	Comments:

Lumen Output Details

Model #	Size	Output	Color Temp.	Wattage	Lumen Output
TECHOLED-BX-2P-D-2-LO-30	2'	Low	3000K	11W	1100Lm
TECHOLED-BX-2P-D-2-ME-30	2'	Medium	3000K	16W	1600Lm
TECHOLED-BX-2P-D-2-HI-30	2'	High	3000K	20W	2000Lm
TECHOLED-BX-2P-D-4-LO-30	4'	Low	3000K	22W	2200Lm
TECHOLED-BX-2P-D-4-ME-30	4'	Medium	3000K	31W	3100Lm
TECHOLED-BX-2P-D-4-HI-30	4'	High	3000K	40W	4000Lm
TECHOLED-BX-2P-D-6-LO-30	6'	Low	3000K	33W	3300Lm
TECHOLED-BX-2P-D-6-ME-30	6'	Medium	3000K	46W	4600Lm
TECHOLED-BX-2P-D-6-HI-30	6'	High	3000K	60W	6000Lm
TECHOLED-BX-2P-D-8-LO-30	8'	Low	3000K	46W	4600Lm
TECHOLED-BX-2P-D-8-ME-30	8'	Medium	3000K	61W	6100Lm
TECHOLED-BX-2P-D-8-HI-30	8'	High	3000K	80W	8000Lm

Performance above applies to 90 CRI, 3000K. Calculate 96% for 2700K, 104% for 3500K and 109% for 4000K

Performance

Output Direct		Direct	
	Lumens / W	W / ft	Lumens / ft
Low	100	5.5	550
Medium	100	7.7	770
High	100	10	1000

Project:	Type:
	Comments:

Driver Option Details

Code	Description
LT1	**LDE1** - Lutron Hi-lume 1% EcoSystem, Soft-on, Fade-to Black Dimming
DA	**DALI**
DMX	**DMX** - Decoder provided by TechoLED, controller by others

Controls Details

Code	Description
RF-D	**RF Wireless** remote controller for tunable white. **Default for tunable white.**
RF-R	**RF Wireless** remote controller for RGB & RGBW. **Default for RGB & RGBW.**
M	**Motion Sensor** - remote, for integral sensor consult factory
BM	**Bluetooth Mesh** Smart Wireless Control by BubblyNet
CS	**Bluetooth Mesh** Smart Wireless Control by Casambi
AWNR	**Lutron Athena** wireless node
AWNS	**Lutron Athena** wireless node with sensor
NL-ES7	**Acuity nLight** - Wired nES7 sensor
NL-AIR	**Acuity nLight** - AIR wireless rES7 sensor
NL-M	**Acuity nLight** - ready, sensor by others

techoLED®
BROOKLYN • NY

BX-2P PERIMETER SERIES

Rev. Date: 11/12/2026

Project:	Type:
	Comments:

Perimeter to T- grid

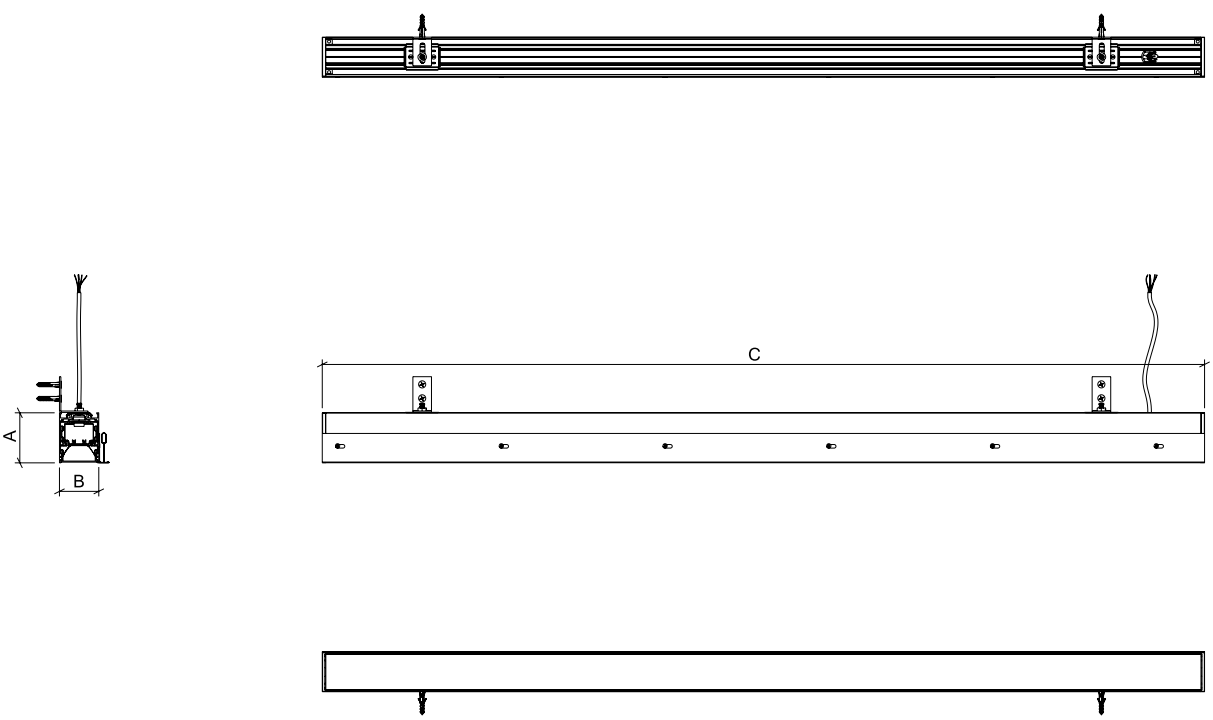

FIXTURE ID	A	B	C
BX-2P-D-2	2.76"	2.17"	24“
BX-2P-D-4	2.76"	2.17"	47.5“
BX-2P-D-6	2.76"	2.17"	71.5“
BX-2P-D-8	2.76"	2.17"	95.5“

Project:	Type:
	Comments:

Perimeter to T- grid

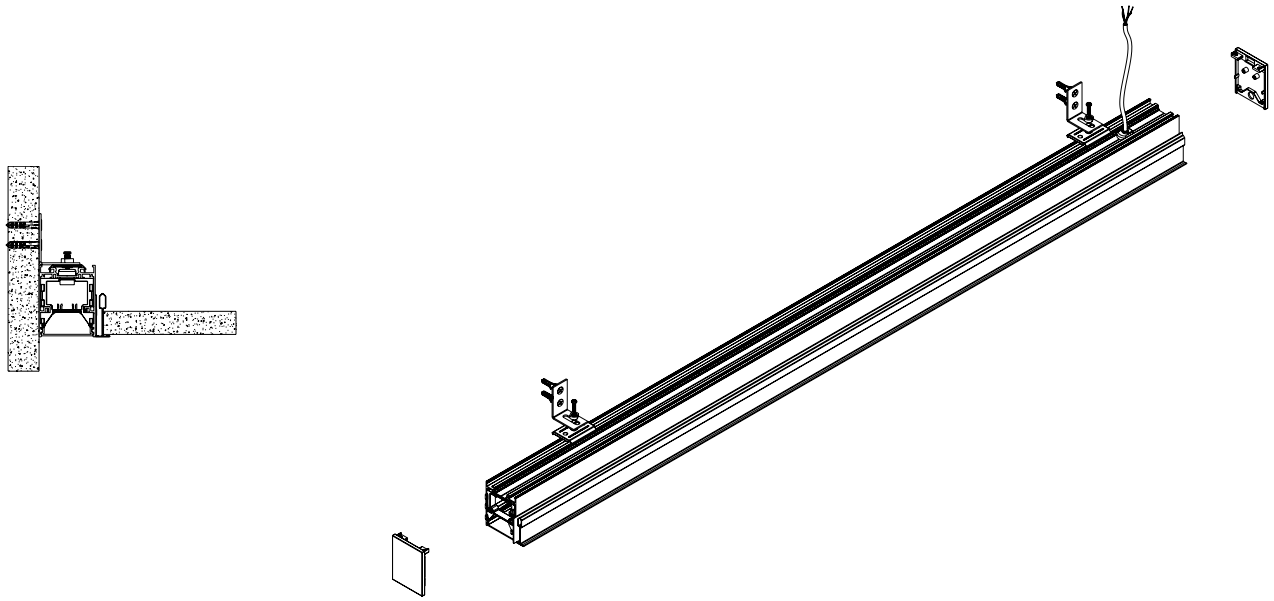

Perimeter to T- grid Kit

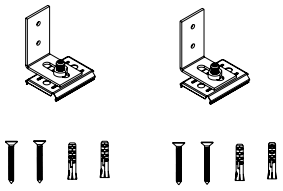

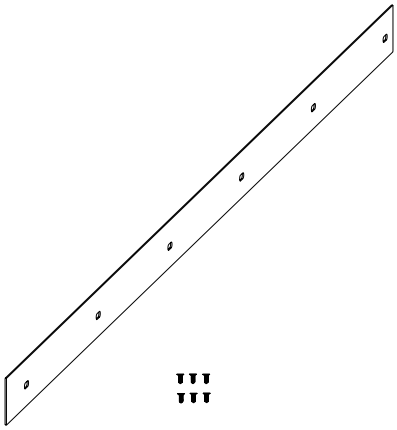



techoLED®
BROOKLYN • NY

BX-2P PERIMETER SERIES

Rev. Date: 11/12/2026

Project:	Type:
	Comments:

2" Regressed Perimeter to T- grid

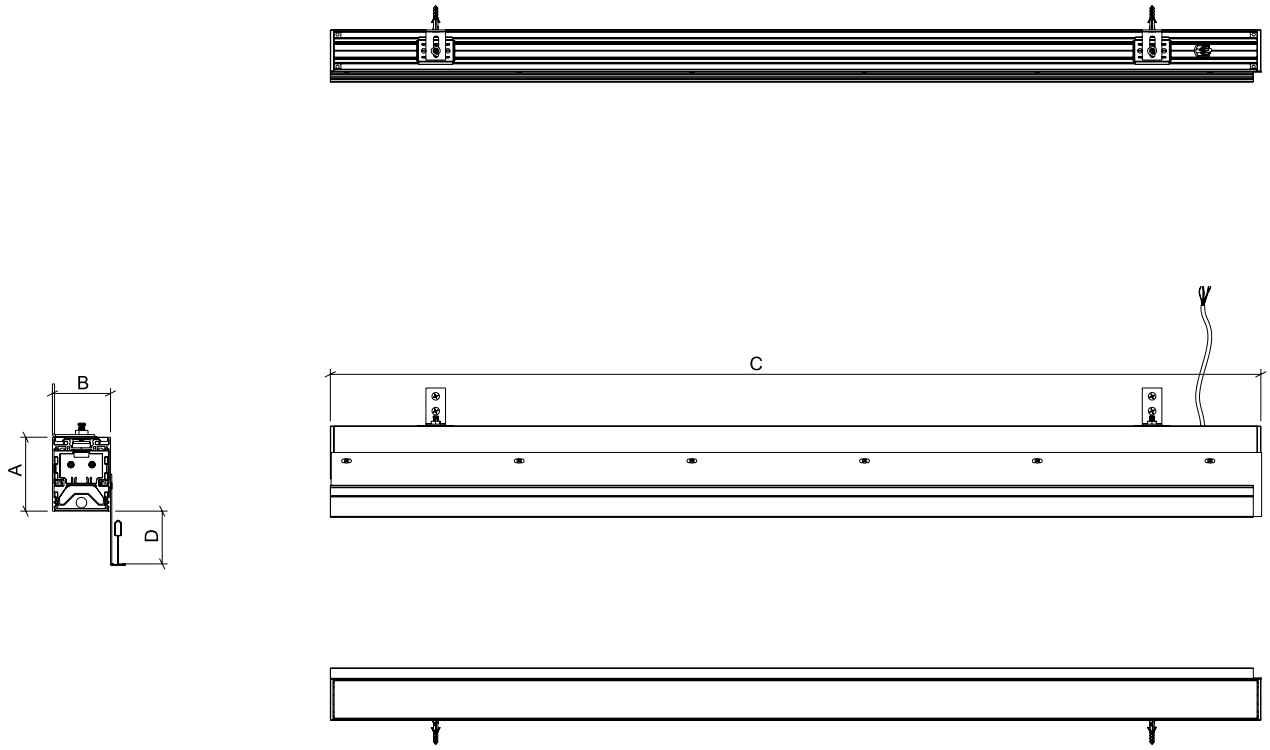

FIXTURE ID	A	B	C	D
BX-2P-D-2	2.76"	2.17"	24“	2"
BX-2P-D-4	2.76"	2.17"	47.5“	2"
BX-2P-D-6	2.76"	2.17"	71.5“	2"
BX-2P-D-8	2.76"	2.17"	95.5“	2"

techoLED®
BROOKLYN • NY

BX-2P PERIMETER SERIES

Rev. Date: 11/12/2026

Project:	Type:
	Comments:

2" Regressed Perimeter to T- grid

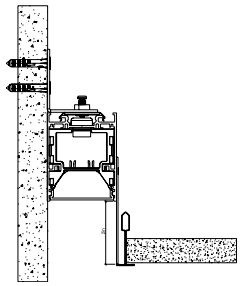

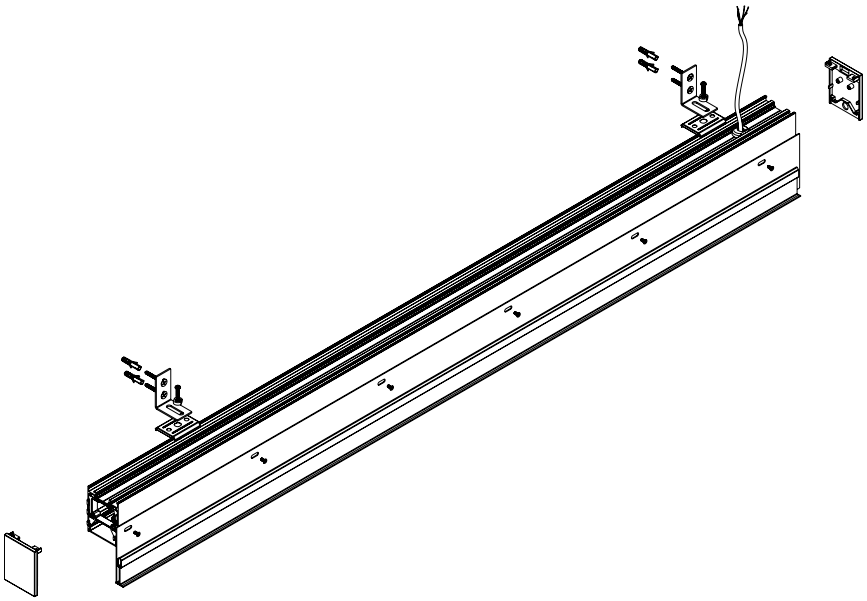

2" Regressed Perimeter to T- grid Kit

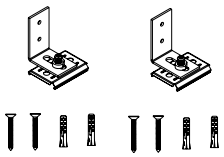

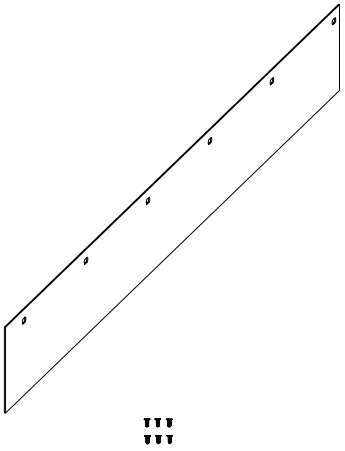



techoLED®
BROOKLYN • NY

BX-2P PERIMETER SERIES

Rev. Date: 11/12/2026

Project:	Type:
	Comments:

Perimeter to Flange

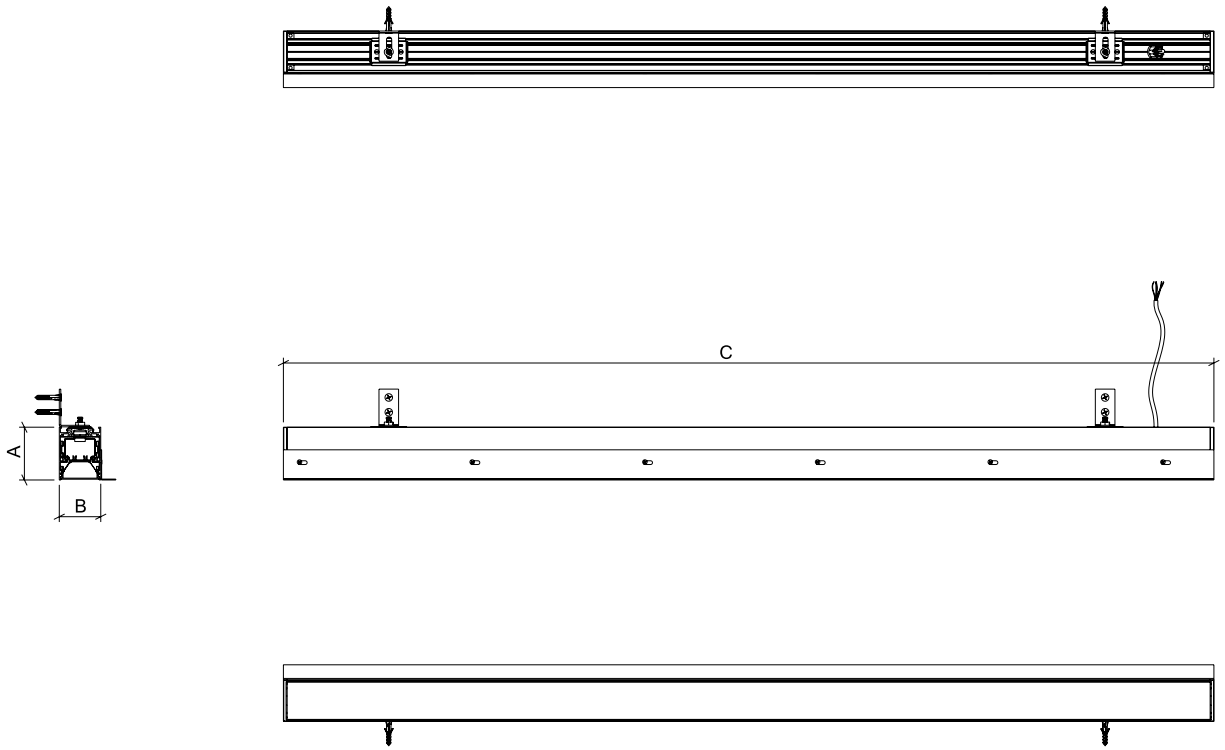

FIXTURE ID	A	B	C
BX-2P-D-2	2.76"	2.17"	24“
BX-2P-D-4	2.76"	2.17"	47.5“
BX-2P-D-6	2.76"	2.17"	71.5“
BX-2P-D-8	2.76"	2.17"	95.5“

techoLED®
BROOKLYN • NY

BX-2P PERIMETER SERIES

Rev. Date: 11/12/2026

Project:	Type:
	Comments:

Perimeter to Flange

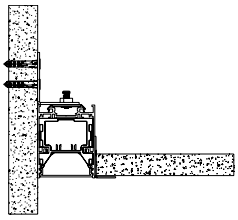

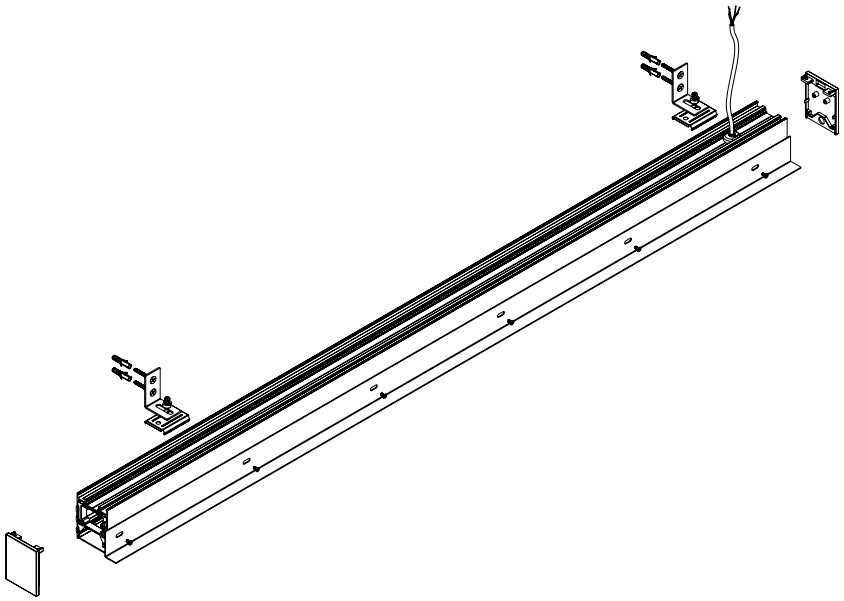

Perimeter to Flange kit

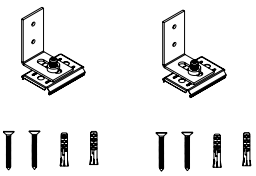

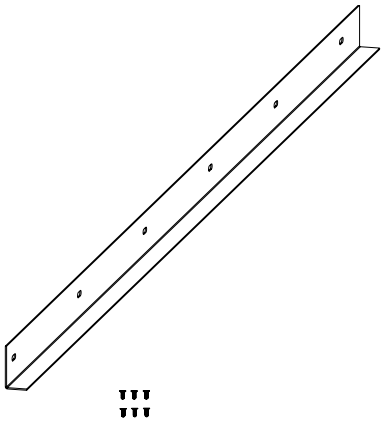



techoLED®
BROOKLYN • NY

BX-2P PERIMETER SERIES

Rev. Date: 11/12/2026

Project:	Type:
	Comments:

2" Regressed Perimeter to Flange

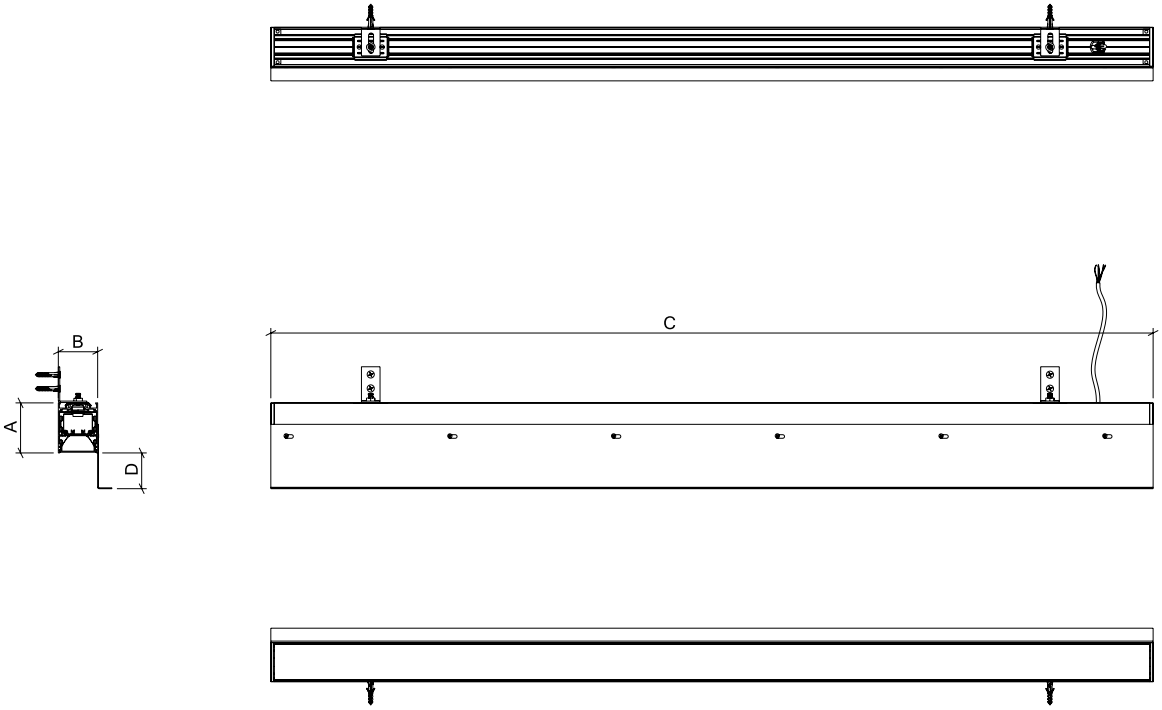

FIXTURE ID	A	B	C	D
BX-2P-D-2	2.76"	2.17"	24“	2"
BX-2P-D-4	2.76"	2.17"	47.5“	2"
BX-2P-D-6	2.76"	2.17"	71.5“	2"
BX-2P-D-8	2.76"	2.17"	95.5“	2"

techoLED®
BROOKLYN • NY

BX-2P PERIMETER SERIES

Rev. Date: 11/12/2026

Project:	Type:
	Comments:

2" Regressed Perimeter to Flange

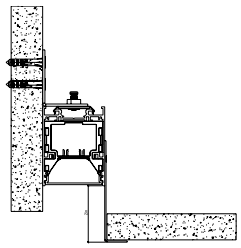

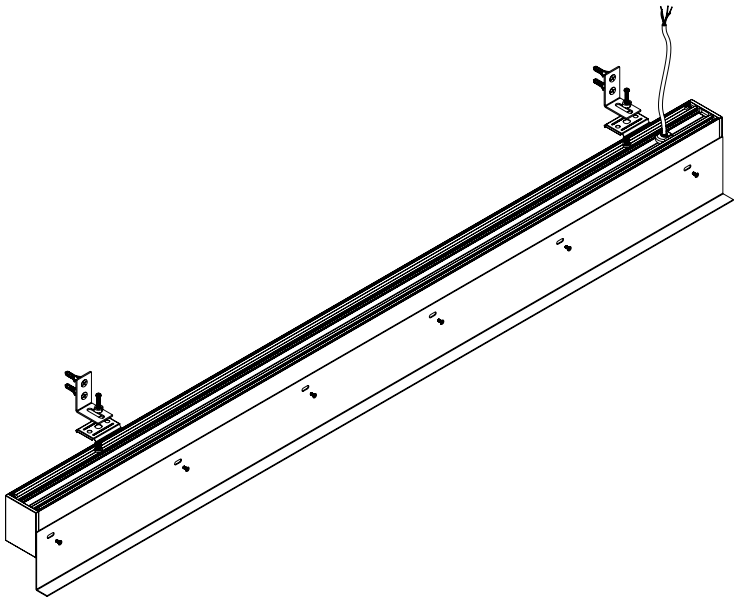

2" Regressed Perimeter to Flange kit

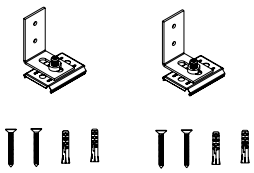

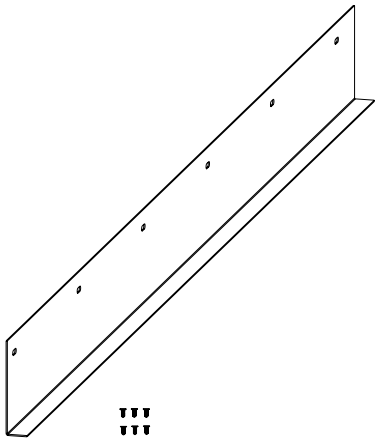



techoLED®
BROOKLYN • NY

BX-2P PERIMETER SERIES

Rev. Date: 11/12/2026

Project:	Type:
	Comments:

Perimeter to mud-in

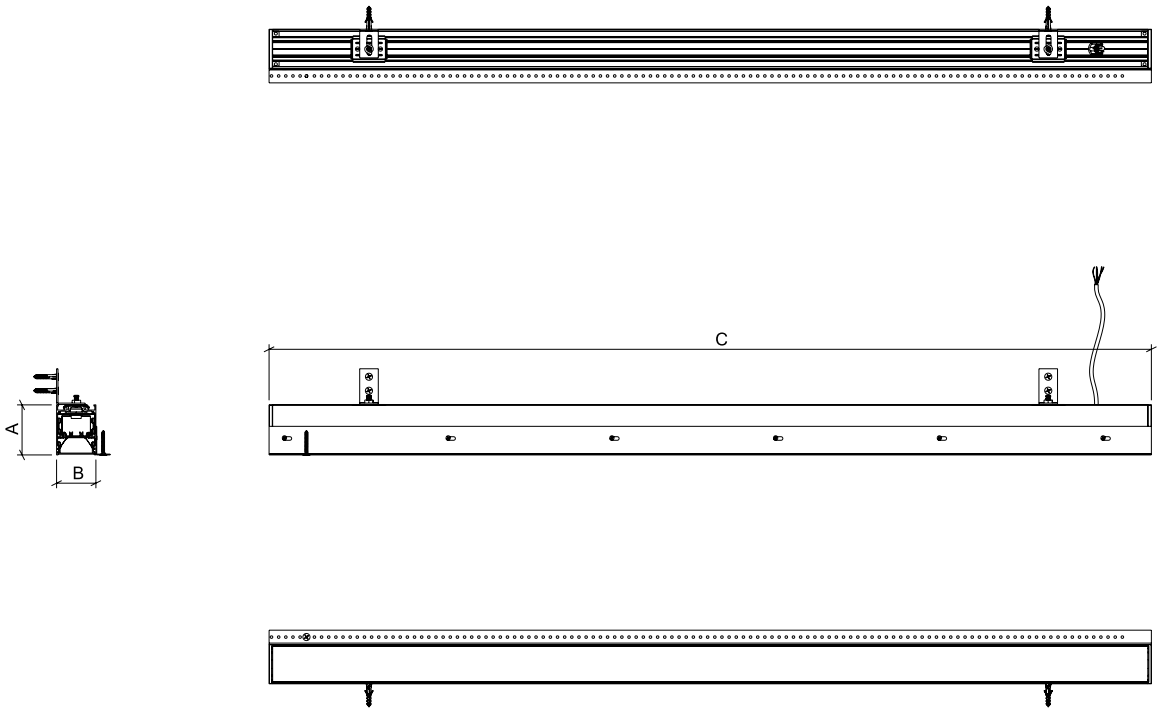

FIXTURE ID	A	B	C
BX-2P-D-2	2.76"	2.17"	24“
BX-2P-D-4	2.76"	2.17"	47.5“
BX-2P-D-6	2.76"	2.17"	71.5“
BX-2P-D-8	2.76"	2.17"	95.5“

Project:	Type:
	Comments:

Perimeter to mud-in

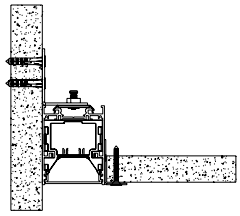

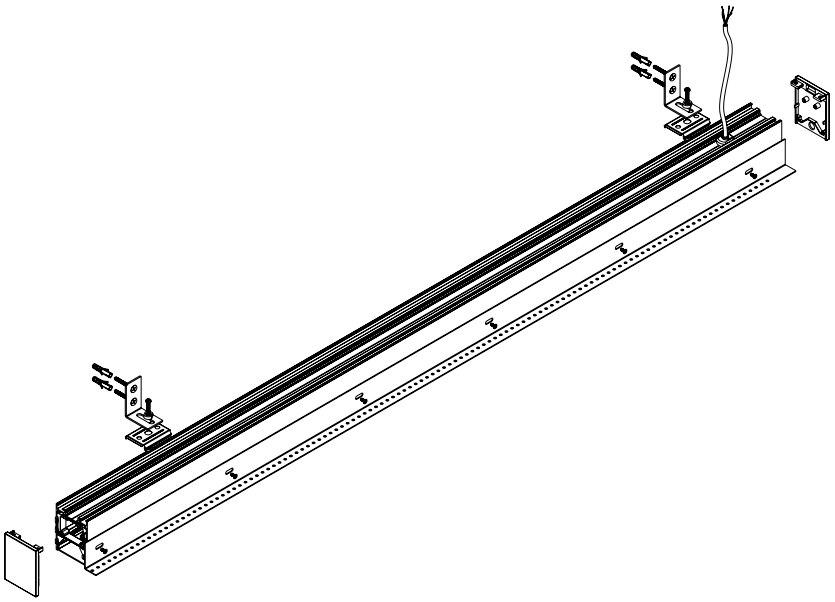

Perimeter to mud-in kit

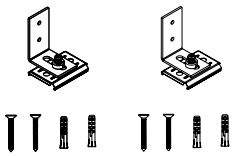

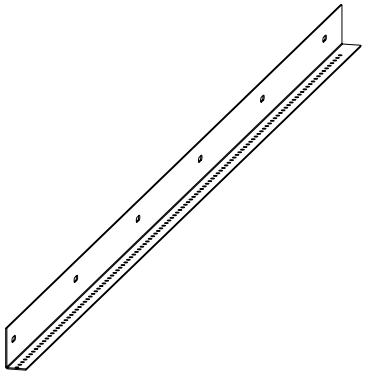



techoLED®
BROOKLYN • NY

BX-2P PERIMETER SERIES

Rev. Date: 11/12/2026

Project:	Type:
	Comments:

2" Regressed Perimeter to mud-in

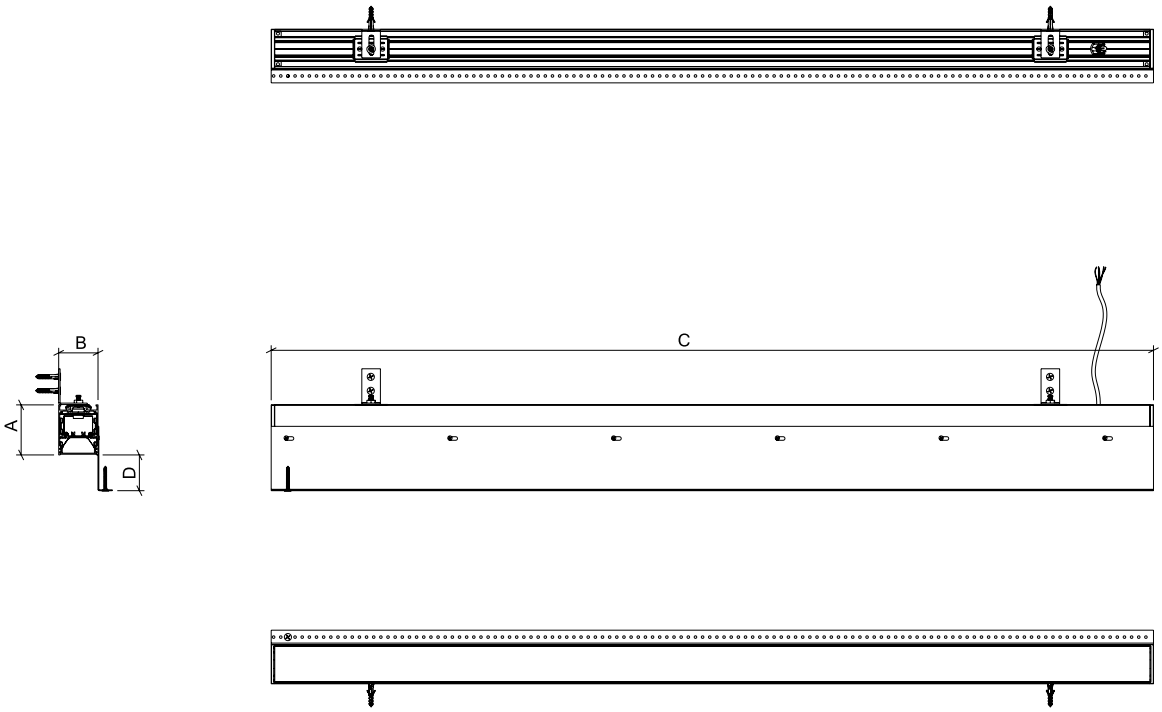

FIXTURE ID	A	B	C	D
BX-2P-D-2	2.76"	2.17"	24“	2"
BX-2P-D-4	2.76"	2.17"	47.5“	2"
BX-2P-D-6	2.76"	2.17"	71.5“	2"
BX-2P-D-8	2.76"	2.17"	95.5“	2"

Project:	Type:
	Comments:

2" Regressed Perimeter to mud-in

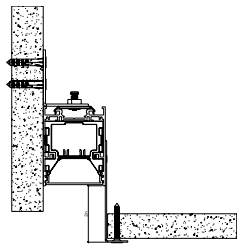

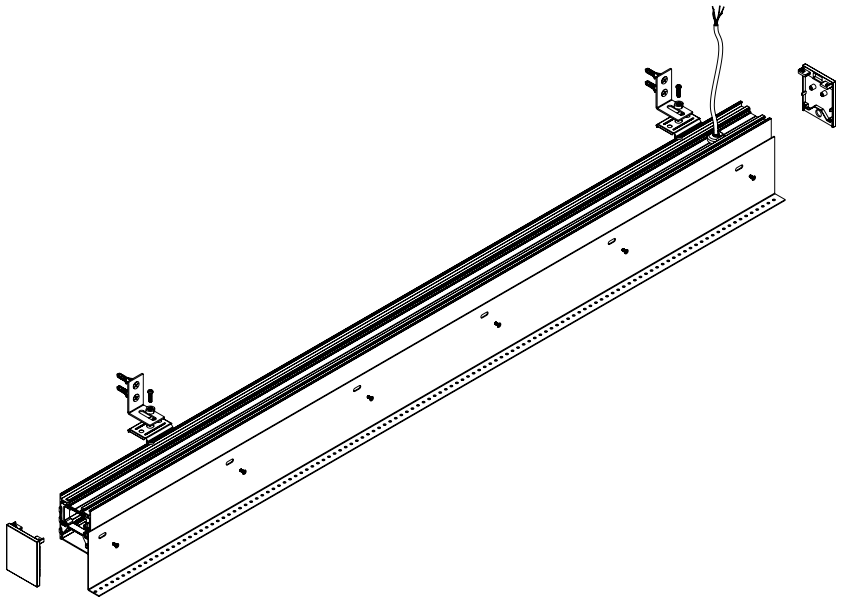

2" Regressed Perimeter to mud-in kit

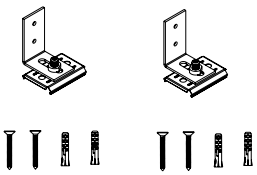

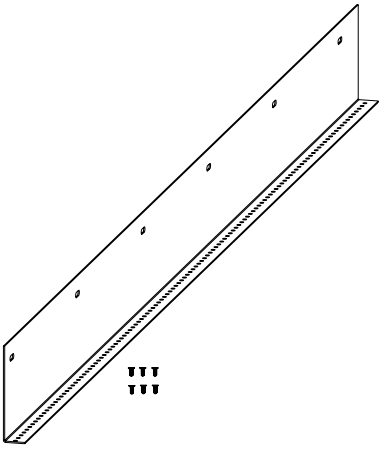

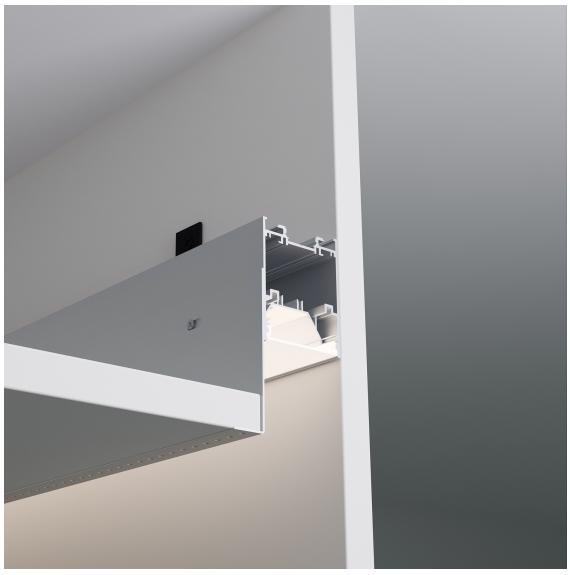

Project:	Type:
	Comments:

Connectors

BX-2P L-shape

BX-2P-L	Connector
A	25.08"
B	25.08"
C	2.76"
D	2.17"

Not so scale

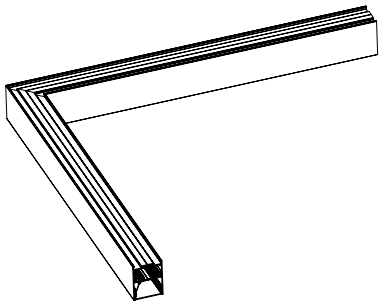

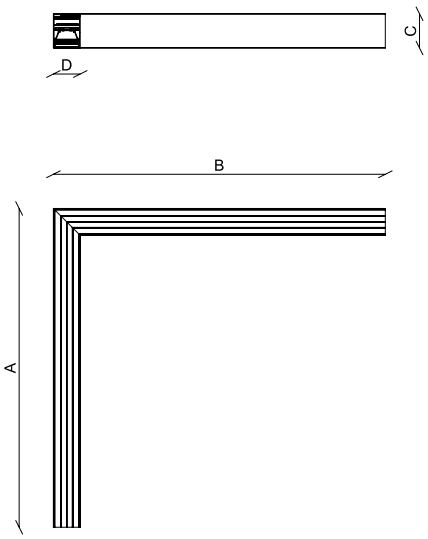

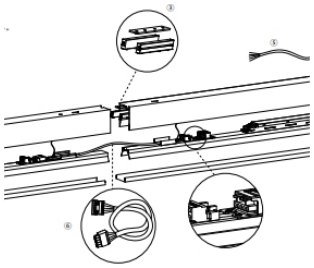

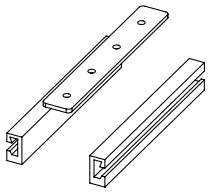

L45-180

Project:	Type:
	Comments:

Photometrics

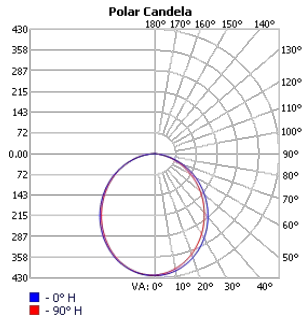

TECHOLED-BX-2P-D-2-LO-30

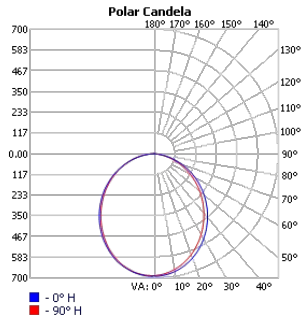

TECHOLED-BX-2P-D-2-ME-30

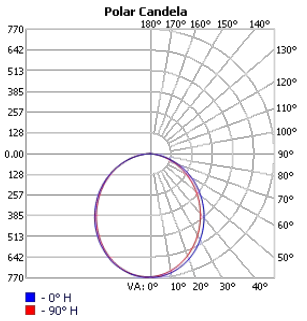

TECHOLED-BX-2P-D-2-HI-30

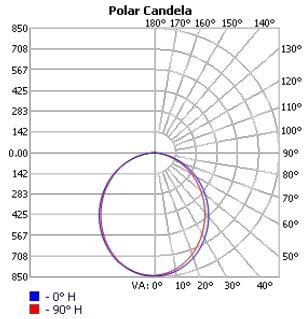

TECHOLED-BX-2P-D-4-LO-30

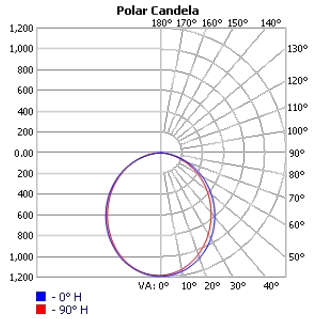

TECHOLED-BX-2P-D-4-ME-30

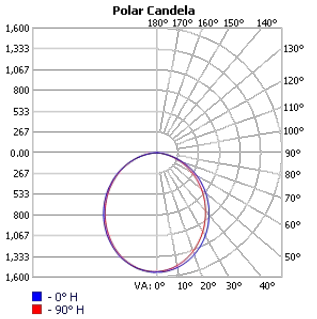

TECHOLED-BX-2P-D-4-HI-30

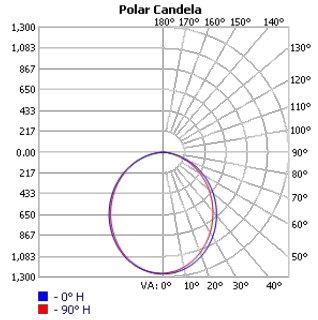

TECHOLED-BX-2P-D-6-LO-30

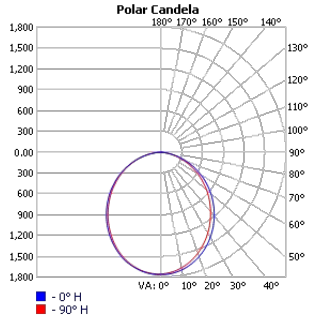

TECHOLED-BX-2P-D-6-ME-30

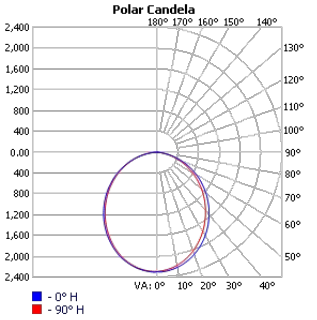

TECHOLED-BX-2P-D-6-HI-30

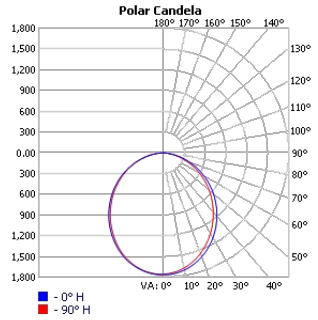

TECHOLED-BX-2P-D-8-LO-30

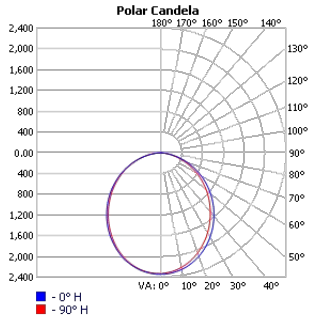

TECHOLED-BX-2P-D-8-ME-30

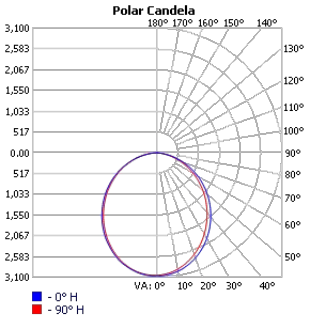

TECHOLED-BX-2P-D-8-HI-30

Project:	Type:
	Comments:

Patterns Option Examples

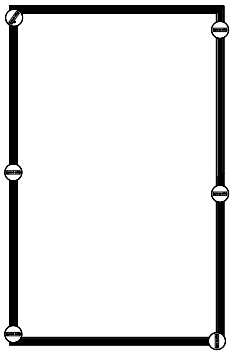

Rectangle

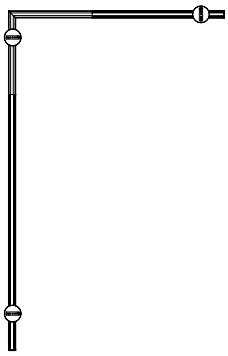

L-Shape

Project:	Type:
	Comments:

Finish Details (powder coat finish)

Standard Colors

W – White


S – Silver


B – Black

Custom Colors


RAL 1003


RAL 2004


RAL 3000


RAL 4001


RAL 5002


RAL 6000


RAL 6038


RAL 7001


RAL 1036


RAL 8029

Any RAL color available, please refer to ralcolorchart.com

Custom Wooden Colors


American Walnut


Cherry


Maple


Light Oak

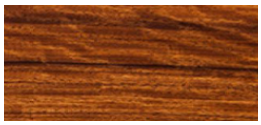
Palisander Santos

Project:	Type:
	Comments:

Color Temperature

Color Temperature

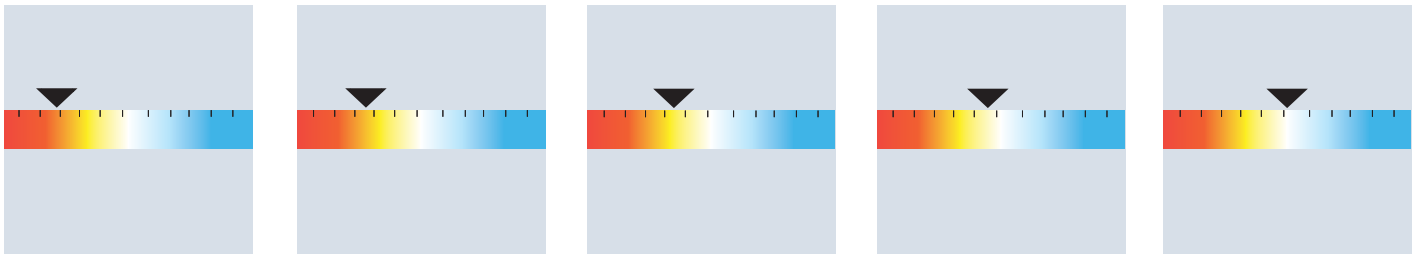

2700K | 3000K | 3500K | 4000K | 5000K

Tunable White

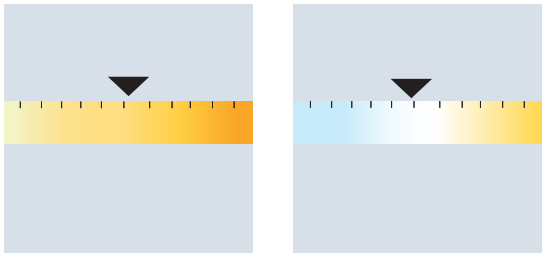

Dim To Warm | Tunable White