Communications Cover Plate

828COMTCAL

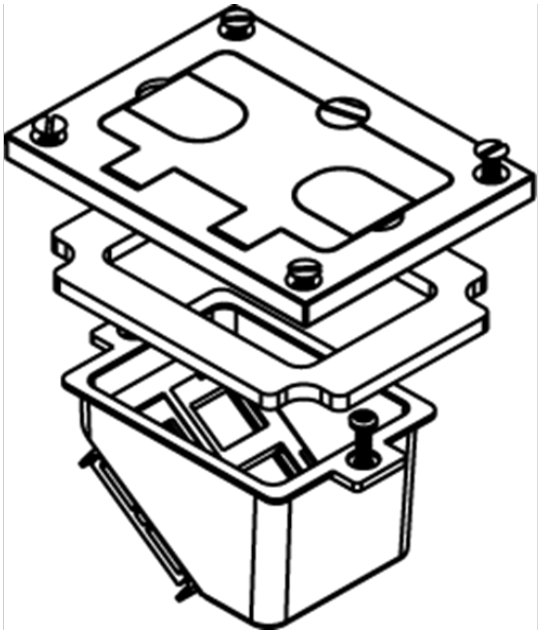

features & benefits

Brushed aluminum communication cover plate. Allows for up to four communication devices to be mounted in a recessed position within the 880S and 880CS Floor Boxes. Has removable slides for cable egress. NOTE: Not for use with 817C, 827C, and 837C Flanges.

specifications

General Info

Product Series: Omnibox
Component Type: Covers & Flanges